Sales Code: SY-FSB309BLK-A **Barcode:** 5056474518140 **Brand:** Synergy **Description:** Synergy 1750mm Gloss Black Slipper Freestanding Bath

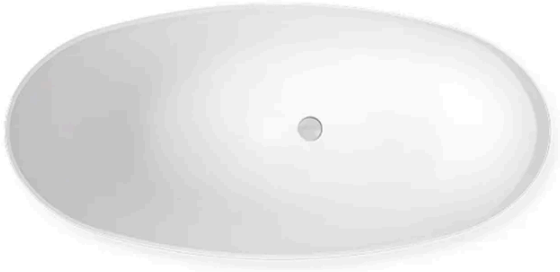

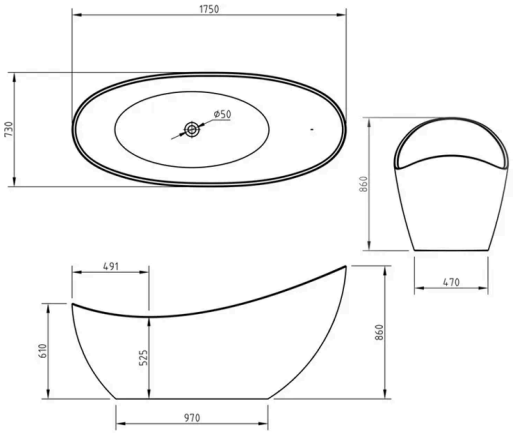

Product Dimensions

Product	860 x 730 x 1750mm (H x W x L)
Packaged	890 x 760 x 1780mm (H x W x D)
Nett Weight	42 kg
Packaged Weight	42 kg

Packaging Details

Box Qty	1

Product Details

Volume	167 Litre
Country of Origin	China
Product Material	Acrylic
Colour/Finish	Gloss Black
Style	Contemporary
Bath Panel Included	No
Ce Certified	Yes
Displaced Capacity	97 Litre
No. Of Tapholes	No Tapholes
Overflow Included	No
Tap Included	No
Waste Included	No

© ROXOR Group