Sales Code: SY-FSB309-A **Barcode:** 5056474518133 **Brand:** Synergy **Description:** Synergy 1750mm Slipper Freestanding Bath



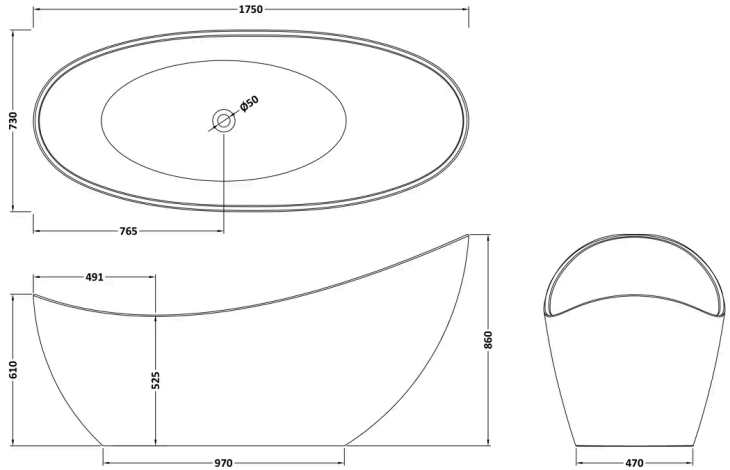

Product Dimensions

Product	870 x 750 x 1750mm (H x W x L)
Packaged	890 x 760 x 1780mm (H x W x D)
Nett Weight	42 kg
Packaged Weight	42 kg

Packaging Details

Box Qty	1

Product Details

Volume	167 Litre
Country of Origin	China
Product Material	Acrylic
Colour/Finish	White
Style	Contemporary
Bath Panel Included	No
Ce Certified	Yes
Displaced Capacity	97 Litre
Hydrotherapy System	No
Includes Grips	No
No. Of Tapholes	No Tapholes
Overflow Included	No
Tap Included	No
Waste Included	No

© ROXOR Group