Sales Code: SY-FSB308-A **Barcode:** 5056474503009 **Brand:** Synergy **Description:** Synergy Pebble 1600mm Freestanding Bath With Waste



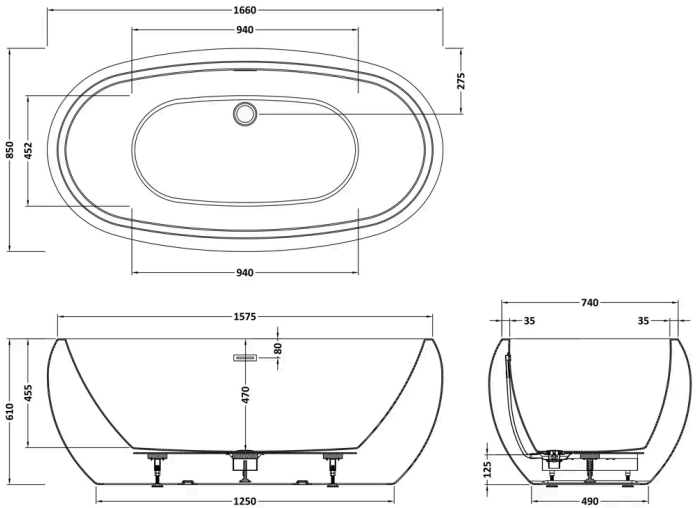

Product Dimensions

Product	610 x 850 x 1660mm (H x W x L)
Packaged	660 x 900 x 1710mm (H x W x D)
Nett Weight	42 kg
Packaged Weight	42 kg

Packaging Details

Box Qty	1

Product Details

Volume	235 Litre
Country of Origin	China
Product Material	Acrylic
Colour/Finish	Gloss White
Style	Contemporary
Bath Panel Included	No
Ce Certified	Yes
Displaced Capacity	165 Litre
No. Of Tapholes	No Tapholes
Overflow Included	Yes
Tap Included	No
Waste Included	Yes

© ROXOR Group