Sales Code: SY-FSB303-A **Barcode:** 5056474545245 **Brand:** Synergy **Description:** Synergy Brentwood 1555mm Freestanding Bath

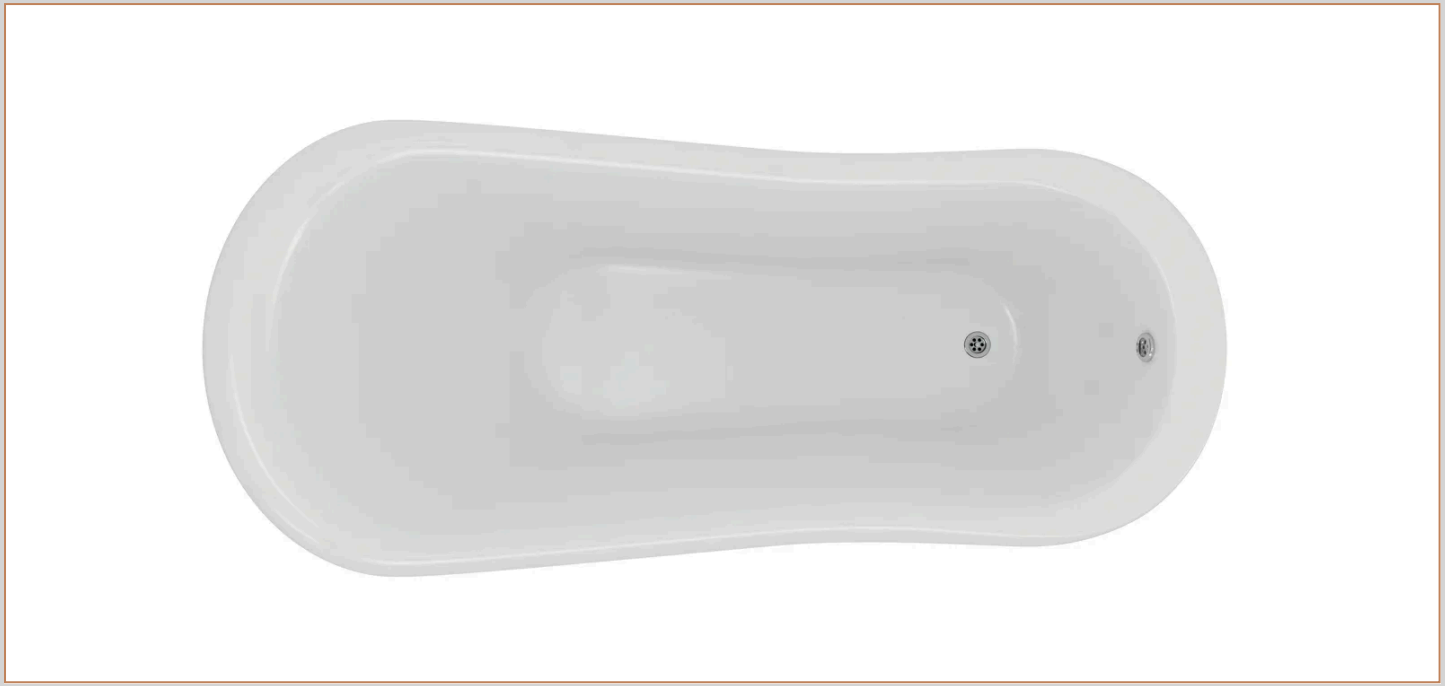

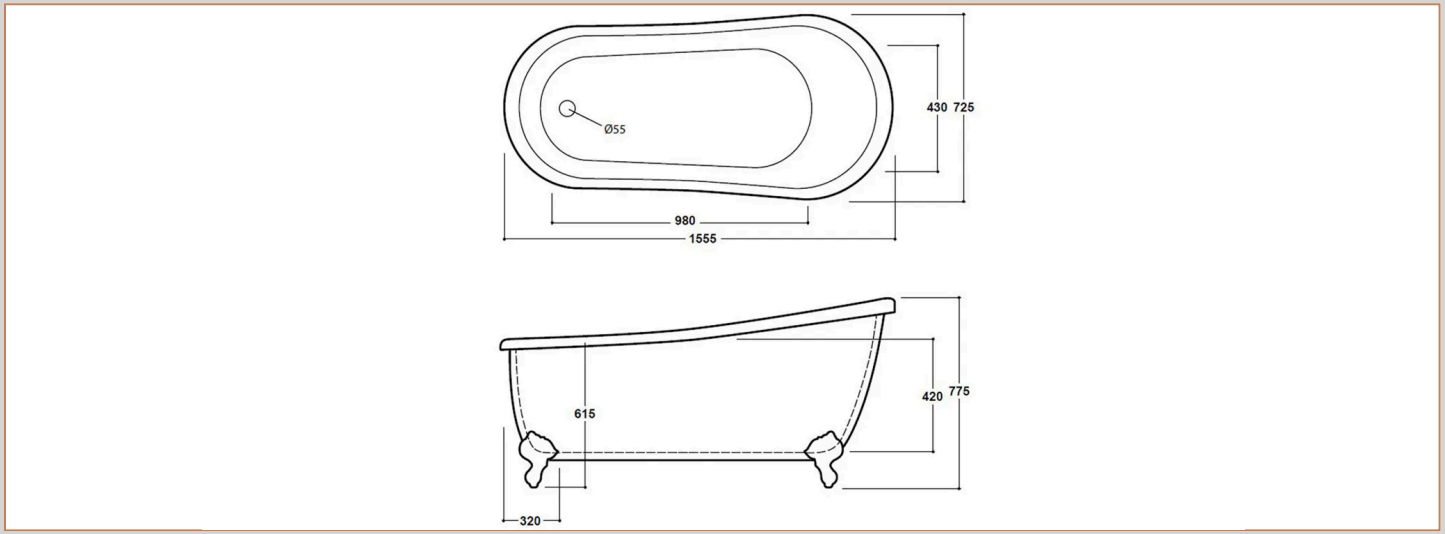

Product Dimensions

Product	775 x 725 x 1555mm (H x W x L)
Packaged	1605 x 825 x 2250mm (H x W x D)
Nett Weight	32 kg
Packaged Weight	32 kg

Packaging Details

Box Qty	1

Product Details

Volume	149 Litre
Country of Origin	China
Product Material	Acrylic
Colour/Finish	White
Style	Contemporary
Bath Panel Included	No
Ce Certified	Yes
Displaced Capacity	79 Litre
No. Of Tapholes	No Tapholes
Overflow Included	No
Tap Included	No
Waste Included	No

© ROXOR Group