Sales Code: SY-FSB302-A **Barcode:** 5056474545238 **Brand:** Synergy **Description:** Synergy Wilmslow 1795mm Double Ended Bath



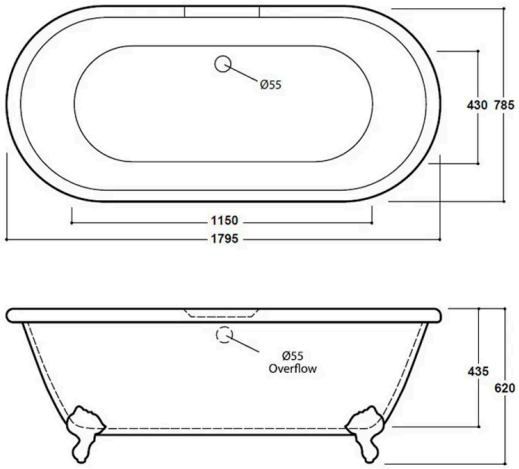

Product Dimensions

Product	435 x 1 x 1795mm (H x W x L)
Packaged	1845 x 885 x 2250mm (H x W x D)
Nett Weight	37.1 kg
Packaged Weight	37.1 kg

Product Details

Volume	185 Litre
Country of Origin	China
Product Material	Acrylic
Colour/Finish	White
Style	Contemporary
Bath Panel Included	No
Displaced Capacity	115 Litre
No. Of Tapholes	No Tapholes
Overflow Included	Yes
Tap Included	No
Waste Included	No

© ROXOR Group