Sales Code: SY-FSB224-A **Barcode:** 5064007020619 **Brand:** Synergy **Description:** Synergy Aruba 1590mm Freestanding Bath

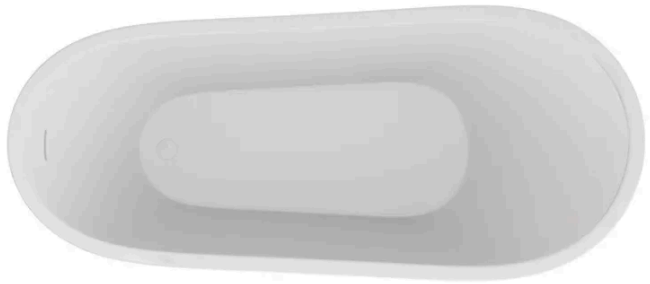

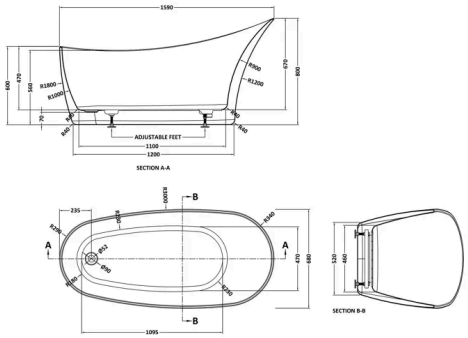

Product Dimensions

Product	800 x 675 x 1590mm (H x W x L)
Packaged	840 x 720 x 1620mm (H x W x D)
Nett Weight	36 kg
Packaged Weight	56 kg

Packaging Details

Box Qty	1

Product Details

Volume	195 Litre
Country of Origin	Hong Kong
Product Material	Acrylic
Colour/Finish	White
Style	Contemporary
Fixings Included	No
Bath Panel Included	No
Ce Certified	No
Displaced Capacity	195 Litre
Includes Grips	No
Leg Set Included	No
No. Of Tapholes	No Tapholes
Overflow Included	No
Tap Included	No
Ukca Certified	No
Waste Included	No

© ROXOR Group