Sales Code: SY-FSB207-A **Barcode:** 5056474502903 **Brand:** Synergy **Description:** Synergy Ibiza 1830mm Freestanding Double Ended Bath



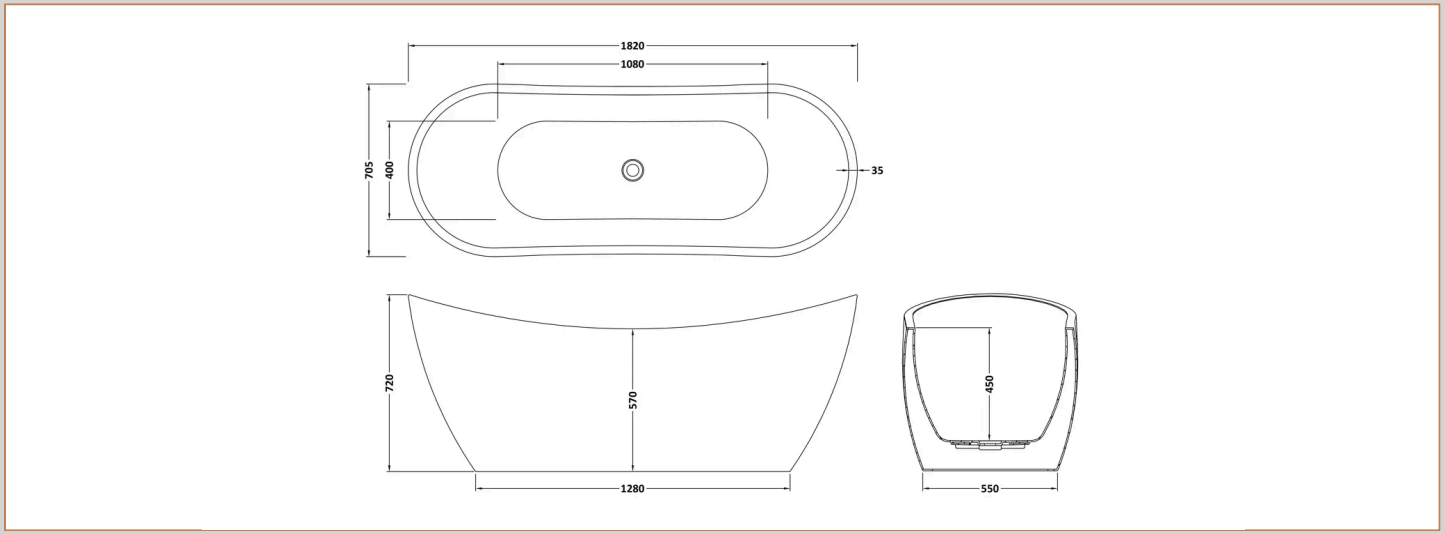

Product Dimensions

Product	720 x 705 x 1820mm (H x W x L)
Packaged	770 x 750 x 1860mm (H x W x D)
Nett Weight	44 kg
Packaged Weight	44 kg

Packaging Details

Box Qty	1

Product Details

Volume	230 Litre
Country of Origin	China
Product Material	Acrylic
Colour/Finish	White
Style	Contemporary
Bath Panel Included	No
Ce Certified	Yes
Displaced Capacity	160 Litre
No. Of Tapholes	No Tapholes
Overflow Included	Yes
Tap Included	No
Waste Included	Yes

© ROXOR Group