Sales Code: SY-FSB201-A **Barcode:** 5056474502828 **Brand:** Synergy **Description:** Synergy San Marlo 1555mm Freestanding Bath With Waste

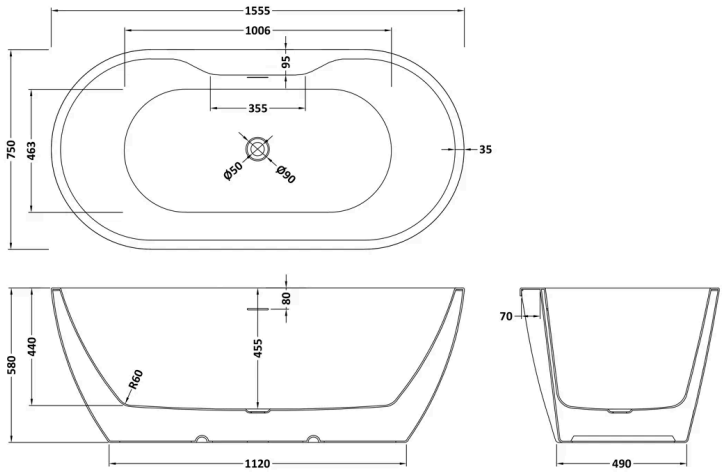

Product Dimensions

Product	580 x 750 x 1555mm (H x W x L)
Packaged	620 x 780 x 1585mm (H x W x D)
Nett Weight	48 kg
Packaged Weight	48 kg

Packaging Details

Box Qty	1

Product Details

Volume	222 Litre
Country of Origin	China
Product Material	Acrylic
Colour/Finish	White
Style	Contemporary
Bath Panel Included	No
Ce Certified	Yes
Displaced Capacity	152 Litre
No. Of Tapholes	No Tapholes
Overflow Included	Yes
Tap Included	No
Waste Included	Yes

© ROXOR Group