Sales Code: SY-EAG15LSF **Barcode:** 5056474506611 **Brand:** Synergy **Description:** Synergy Eaglesham 1200mm Left Hand Corner Bath



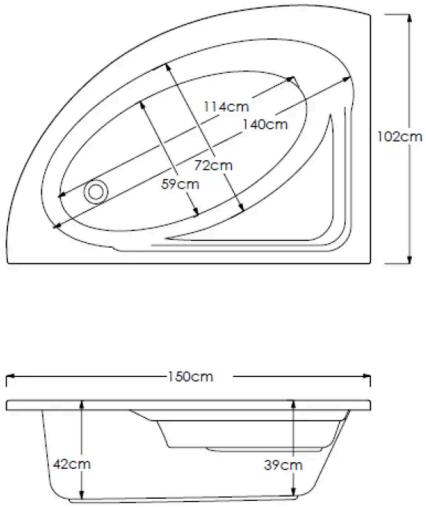

Product Dimensions

Product	4200 x 10200 x 15000mm (H x W x L)
Packaged	430 x 1020 x 1500mm (H x W x D)
Nett Weight	22 kg
Packaged Weight	22 kg

Product Details

Volume	160 Litre
Country of Origin	United Kingdom
Product Material	Acrylic
Colour/Finish	White
Style	Contemporary
Bath Panel Included	No
Ce Certified	Yes
Displaced Capacity	90 Litre
Hydrotherapy System	No
Includes Grips	No
No. Of Tapholes	No Tapholes
Overflow Included	No
Tap Included	No
Waste Included	No

© ROXOR Group