Sales Code: SY-CB504W **Barcode:** 5056474591815 **Brand:** Synergy **Description:** Synergy 460mm 1 Tap Hole Round Ledged Vessel Basin



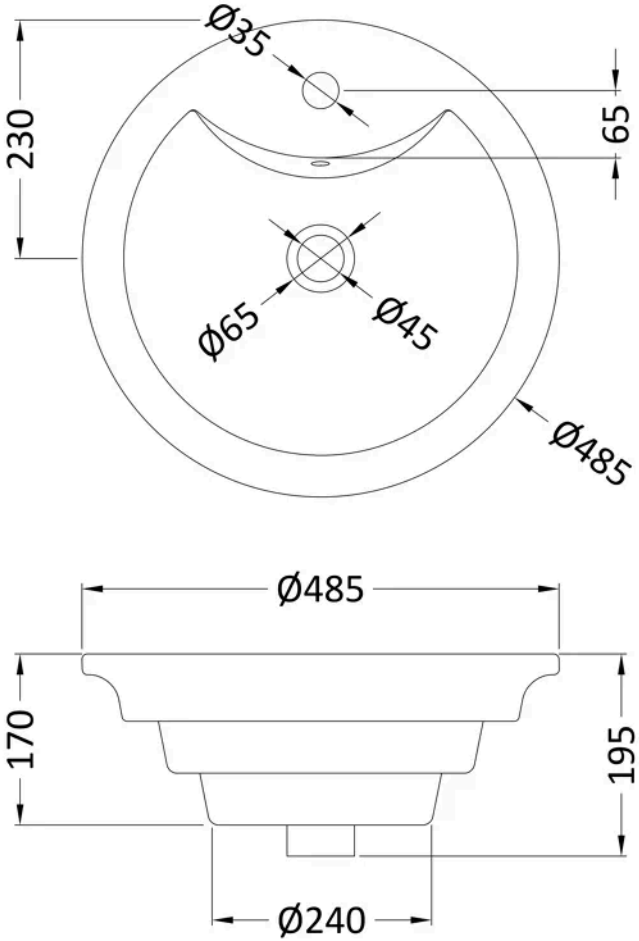

Product Dimensions

Product	195 x 485 x 485mm (H x W x D)
Packaged	230 x 480 x 480mm (H x W x D)
Nett Weight	9.65 kg
Packaged Weight	9.85 kg

Packaging Details

Box Qty	1

Product Details

Country of Origin	China
Product Material	Vitreous China
Colour/Finish	White
Style	Contemporary
Fixings Included	No
Ce Certified	Yes
Inner Bowl Depth	295 mm
Inner Bowl Height	170 mm
Inner Bowl Width	395 mm
No. Of Tapholes	1
Number Of Bowls	1
Overflow Cover Included	No
Overflow Included	Yes
Tap Included	No
Waste Included	No

© ROXOR Group