Sales Code: SY-CB502MW **Barcode:** 5056474591778 **Brand:** Synergy **Description:** Synergy 615mm Matt White Oval Vessel Basin



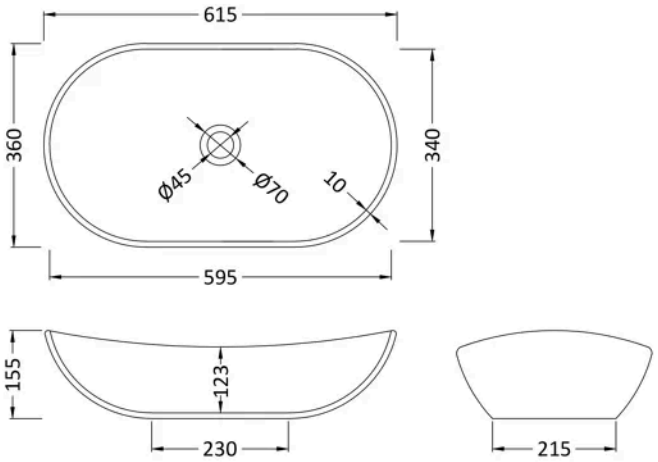

Product Dimensions

Product	155 x 615 x 360mm (H x W x D)
Packaged	175 x 380 x 630mm (H x W x D)
Nett Weight	9.6 kg
Packaged Weight	9.6 kg

Packaging Details

Box Qty	1

Product Details

Country of Origin	China
Product Material	Vitreous China
Colour/Finish	Matt White
Style	Contemporary
Fixings Included	No
Ce Certified	Yes
Inner Bowl Depth	340 mm
Inner Bowl Height	123 mm
Inner Bowl Width	595 mm
No. Of Tapholes	No Tapholes
Number Of Bowls	1
Overflow Cover Included	No
Overflow Included	No
Tap Included	No
Waste Included	No

© ROXOR Group