Sales Code: SY-CB501MB **Barcode:** 5056474591761 **Brand:** Synergy **Description:** Synergy 350mm Matt Black Round Vessel Basin



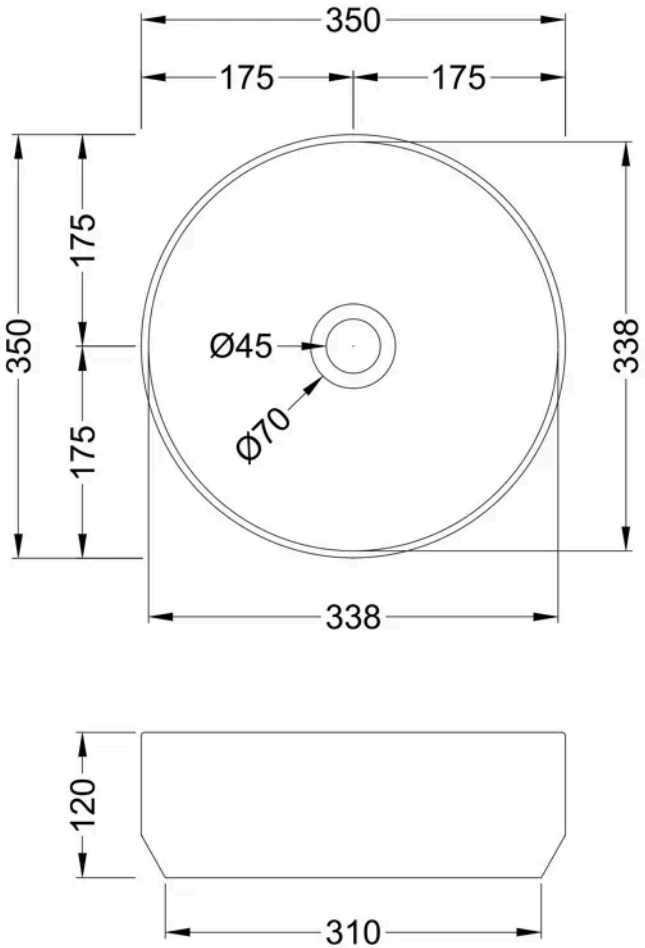

Product Dimensions

Product	120 x 350 x 350mm (H x W x D)
Packaged	145 x 375 x 375mm (H x W x D)
Nett Weight	6.15 kg
Packaged Weight	6.15 kg

Packaging Details

Box Qty	1

Product Details

Country of Origin	China
Product Material	Vitreous China
Colour/Finish	Matt Black
Style	Contemporary
Ce Certified	Yes
Inner Bowl Depth	338 mm
Inner Bowl Height	102 mm
Inner Bowl Width	338 mm
No. Of Tapholes	No Tapholes
Number Of Bowls	1
Overflow Included	No
Tap Included	No
Waste Included	No

© ROXOR Group