**Sales Code:** SY-BW01BZ **Barcode:** 5056883738597 **Brand:** Synergy **Description:** Synergy Brushed Bronze Universal Push Button Basin Waste



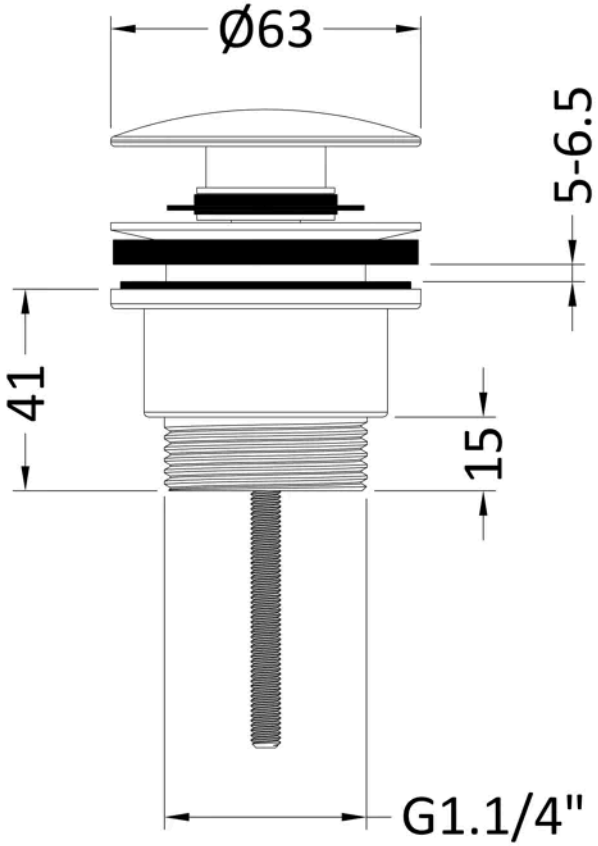


### Product Dimensions

| | |
|---|---|
| Product | 110 x 63 x 63mm (H x W x D) |
| Packaged | 100 x 65 x 65mm (H x W x D) |
| Outer Box | 225 x 330mm (H x W) |
| Nett Weight | 0.34 kg |
| Packaged Weight | 0.34 kg |

### Packaging Details

| | |
|---|---|
| Box Qty | 1 |
| Label Size (mm) | 50 x 100 |
| Label Colour | White |
| Label Qty | 2.0000 |

### Product Details

| | |
|---|---|
| Country of Origin | China |
| Product Material | Brass |
| Waste Type | Push Button |
| Colour/Finish | Brushed Bronze |
| Style | Contemporary |
| Waste Shape | Round |

© ROXOR Group