Sales Code: SY-BRO022 **Barcode:** 5056474591259 **Brand:** Synergy **Description:** Synergy Bronte 963 x 673mm Chrome/White Traditional Towel Rail



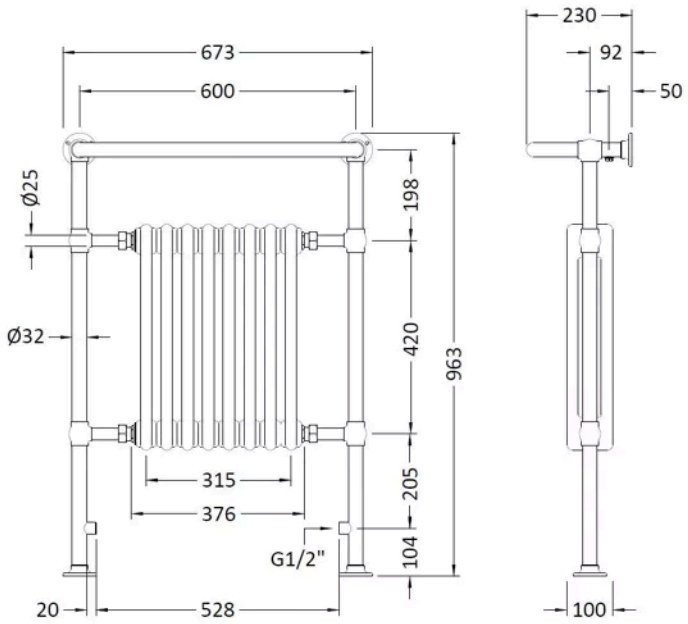

Product Dimensions

Product	963 x 673 x 230mm (H x W x D)
Packaged	294 x 720 x 1020mm (H x W x D)
Nett Weight	17.6 kg
Packaged Weight	20.6 kg

Packaging Details

Box Qty	1
Label Size (mm)	50 x 100
Label Colour	White
Label Qty	2.0000

Product Details

Country of Origin	China
Product Material	Steel
Colour/Finish	Chrome White
Mount Type	Floor
Style	Traditional
Pipe Centres	438
Brackets Included	Yes
Btu Output 30	925
Btu Output 50	1778
Ce Certified	Yes
Floor To Centre Tappings	105 mm
Fuel Type	Water
Maximum Projection	230 mm
Rohs Certification	No
Thermal Output 30	271.0000 Watts
Thermal Output 50	521.0000 Watts
Tube Diameter	32 mm
Ukca Certified	No
Wall To Centre Tappings	100 mm
Weee Certification	No

© ROXOR Group