Sales Code: SY-BEL17R **Barcode:** 5056474510502 **Brand:** Synergy **Description:** Synergy Berg 1700mm Right Hand L Shaped Shower Bath

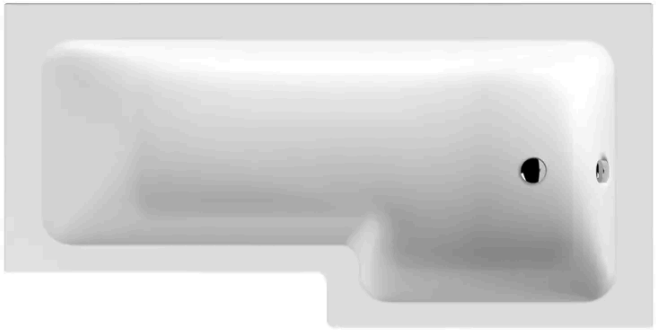

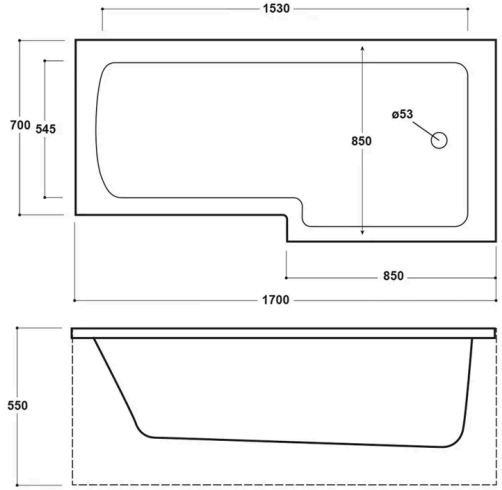

Product Dimensions

Product	400 x 855 x 1695mm (H x W x L)
Packaged	425 x 850 x 1700mm (H x W x D)
Nett Weight	24.5 kg
Packaged Weight	24.5 kg

Packaging Details

Box Qty	1
Label Size (mm)	35 x 300
Label Colour	White
Label Qty	2.0000

Product Details

Volume	235 Litre
Country of Origin	Egypt
Product Material	Acrylic
Colour/Finish	White
Style	Contemporary
Fixings Included	No
Bath Panel Included	No
Ce Certified	Yes
Declaration Of Performance	Yes
Displaced Capacity	165 Litre
Includes Grips	No
Leg Set Included	No
No. Of Tapholes	No Tapholes
Overflow Included	No
Tap Included	No
Ukca Certified	Yes
Waste Included	No

© ROXOR Group