Sales Code: SY-ALL07 **Barcode:** 5056474585449 **Brand:** Synergy **Description:** Synergy Allium Wall Hung Rimless Toilet Pan & Soft Close Seat



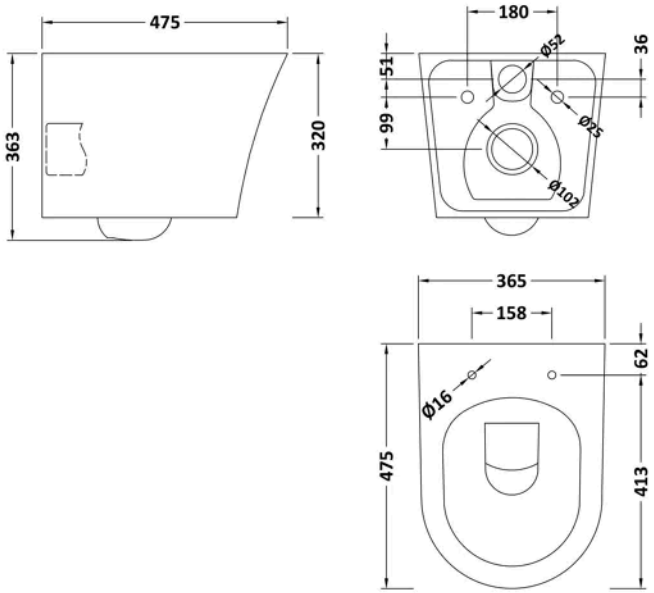

Product Dimensions

Product	363 x 365 x 475mm (H x W x D)
Packaged	420 x 395 x 540mm (H x W x D)
Nett Weight	24 kg
Packaged Weight	25 kg

Packaging Details

Box Qty	1

Product Details

Country of Origin	China
Product Material	Vitreous China
Colour/Finish	White
Style	Contemporary
Ce Certified	Yes
Includes Seat	Yes
Pan Type	Wall Hung

© ROXOR Group