Sales Code: SY-AC001 **Barcode:** 5056883758052 **Brand:** Synergy **Description:** Synergy Acer 545mm 1 Tap Hole Ceramic Basin & Pedestal



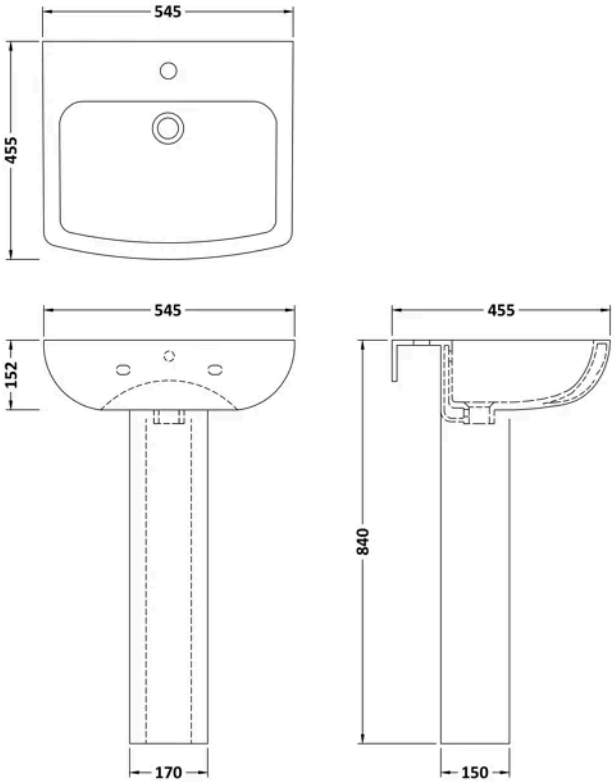

Product Dimensions

Product	840 x 545 x 455mm (H x W x D)
Packaged	230 x 555 x 470mm (H x W x D)
Nett Weight	22 kg
Packaged Weight	22 kg

Product Details

Country of Origin	China
Product Material	Vitreous China
Colour/Finish	White
Style	Contemporary
Ce Certified	Yes
Inner Bowl Height	152 mm
No. Of Tapholes	1
Number Of Bowls	1
Overflow Cover Included	No
Overflow Included	Yes
Tap Included	No
Waste Included	No

© ROXOR Group

Sales Code: SY-ACE01 **Barcode:** 5056474585005 **Brand:** Synergy **Description:** Synergy Acer 1 Tap Hole 545mm Ceramic Basin



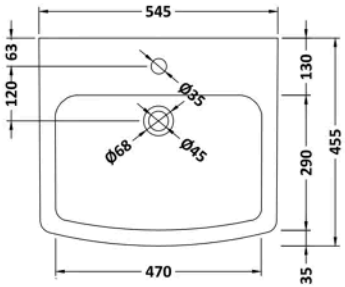

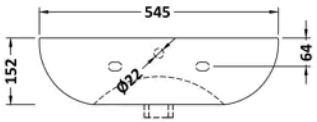

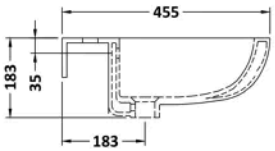

Product Dimensions

Product	183 x 545 x 455mm (H x W x D)
Packaged	230 x 555 x 470mm (H x W x D)
Nett Weight	11.8 kg
Packaged Weight	12 kg

Product Details

Country of Origin	China
Product Material	Vitreous China
Colour/Finish	White
Style	Contemporary
Ce Certified	Yes
Inner Bowl Height	152 mm
No. Of Tapholes	1
Number Of Bowls	1
Overflow Included	Yes
Tap Included	No
Waste Included	No

© ROXOR Group

Sales Code: SY-ACE02 **Barcode:** 5056474585012 **Brand:** Synergy **Description:** Synergy Acer White Contemporary Full Pedestal



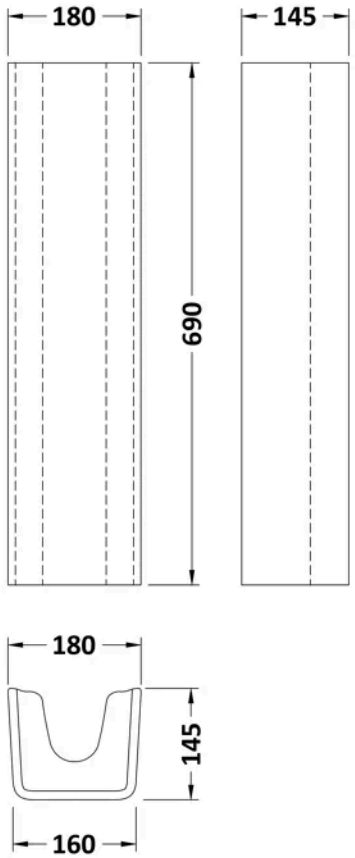

Product Dimensions

Product	690 x 180 x 145mm (H x W x D)
Packaged	700 x 190 x 155mm (H x W x D)
Nett Weight	9.8 kg
Packaged Weight	10 kg

Product Details

Country of Origin	China
Product Material	Vitreous China
Colour/Finish	White
Mount Type	Floor
Style	Contemporary
Ce Certified	Yes

© ROXOR Group