Sales Code: SY-4167MB **Barcode:** 5056474590177 **Brand:** Synergy **Description:** Synergy Matt Black Square Slide Rail Kit



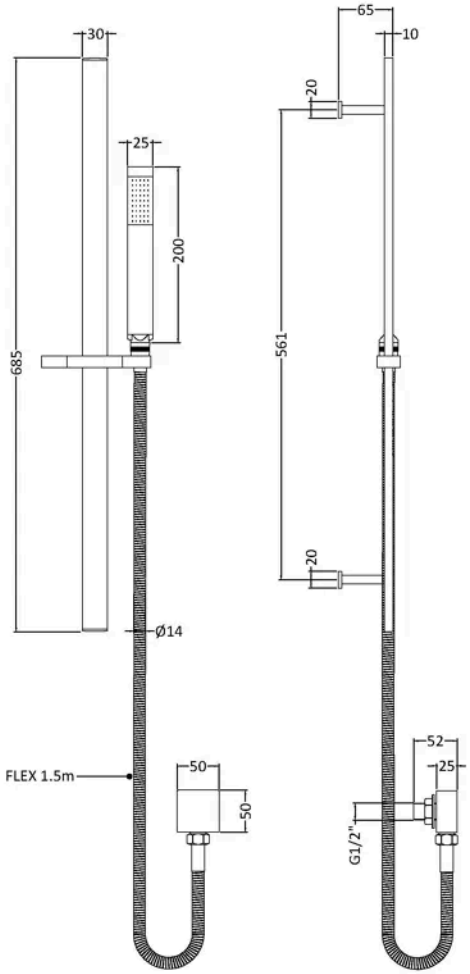

Product Dimensions

Product	685 x 129 x 65mm (H x W x D)
Packaged	83 x 140 x 700mm (H x W x D)
Outer Box	440 x 300 x 715mm (H x W x D)
Nett Weight	1.5 kg
Packaged Weight	1.51 kg

Packaging Details

Box Qty	1
Label Size (mm)	50 x 100
Label Colour	White
Label Qty	2.0000

Product Details

Country of Origin	China
Product Material	Brass Abs
Control Type	Not Applicable
WRAS Approved	No
Colour/Finish	Matt Black
Mount Type	Surface/Wall
Style	Contemporary
Easy Clean	No
TMV2 Approved	No
TMV3 Approved	No
Handset Included	Yes
Head Included	No
Hose Included	Yes
Hose Length	1500 mm
Min Operating Pressure	0.1 Bar
No. Outlets	1.0000
Outlet Elbow Supplied	Yes

© ROXOR Group