Sales Code: STP870 **Barcode:** 5056817753665 **Brand:** nuie Lux **Description:** nuie lux Steeple Brushed Brass Tall Mono Basin Mixer



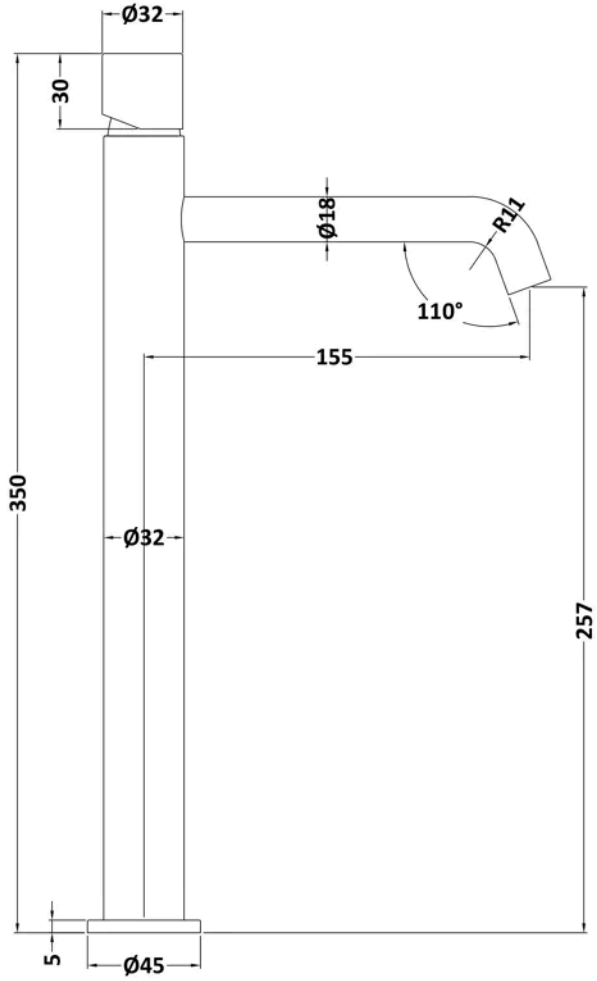

Product Dimensions

Product	290 x 52 x 187mm (H x W x D)
Packaged	95 x 270 x 330mm (H x W x D)
Nett Weight	1.83 kg
Packaged Weight	1.83 kg

Packaging Details

Label Size (mm)	50 x 100
Label Colour	White
Label Qty	1.0000

Product Details

Country of Origin	China
Product Material	Brass,Plastic
Control Type	Manual
WRAS Approved	Yes
Valve/Cartridge Type	Single Lever Cartridge
Colour/Finish	Brushed Brass
Mount Type	Deck
Style	Contemporary
Handle Type	Round
TMV2 Approved	No
TMV3 Approved	No
Pipe Size	1/2"
Min Operating Pressure	0.2 Bar
Tap Spout Height	232 mm
Tap Spout Projection	150 mm
Tap Tails Included	Yes
Valve / Cartridge Type	Single Lever Cartridge
Wras Approval No	2204060

© ROXOR Group