Sales Code: SOL803

Barcode: 5056462679563

Brand: Hudson Reed

Description: Hudson Reed Solar 800mm 2 Drawer Fern Green Floor Standing Cabinet With Polymarble Basin



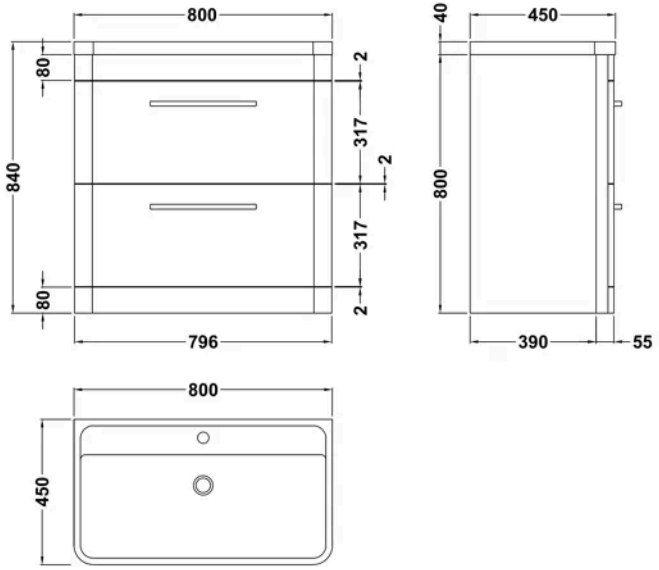

Product Dimensions

Product	840 x 800 x 445mm (H x W x D)
Packaged	870 x 870 x 510mm (H x W x D)
Nett Weight	56.12 kg
Packaged Weight	56.12 kg

Product Details

Country of Origin	Republic of Ireland
Product Material	Mdf Vinyl Smooth Matt
Colour/Finish	Fern Green
Mount Type	Floor
Style	Contemporary
Handle Type	D Shape
Construction Method	Cam & Wood Dowel
Construction Type	Rigid
Drawer Type	80mm High Metal S/C Inc Gallery
Fascia Finish	Mdf Vinyl Smooth Matt
Fsc Certified	Yes
Handles Included	Yes
Inner Bowl Depth	315 mm
Inner Bowl Height	110 mm
Inner Bowl Width	755 mm
Leg Set Included	No
Material Thickness	18 mm
No. Drawers	2
No. Of Tapholes	1
Number Of Bowls	1
Overflow Cover Included	Yes
Overflow Included	Yes
Tap Included	No
Waste Included	No
Waste Shroud	Yes

© ROXOR Group

Sales Code: CUR835 **Barcode:** 5056462659824 **Brand:** Hudson Reed **Description:** Hudson Reed 800mm Fern Green 2 Drawer Floor Standing Vanity Unit



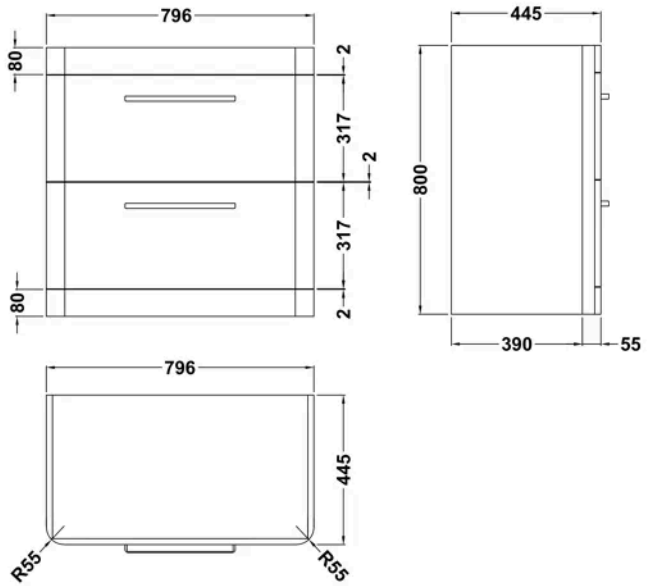

Product Dimensions

Product	800 x 796 x 445mm (H x W x D)
Packaged	870 x 870 x 510mm (H x W x D)
Nett Weight	36 kg
Packaged Weight	38 kg

Product Details

Country of Origin	Republic of Ireland
Product Material	Mdf Vinyl Smooth Matt
Colour/Finish	Fern Green
Mount Type	Floor
Style	Contemporary
Handle Type	D Shape
Construction Method	Cam & Wood Dowel
Construction Type	Rigid
Fascia Finish	Mdf Vinyl Smooth Matt
Fsc Certified	Yes
Handles Included	Yes
Leg Set Included	No
Material Thickness	18 mm
No. Drawers	2

© ROXOR Group

Sales Code: PMB005 **Barcode:** 5055369021765 **Brand:** nuie **Description:** 1 Tap Hole 800mm Polymarble Curved Basin



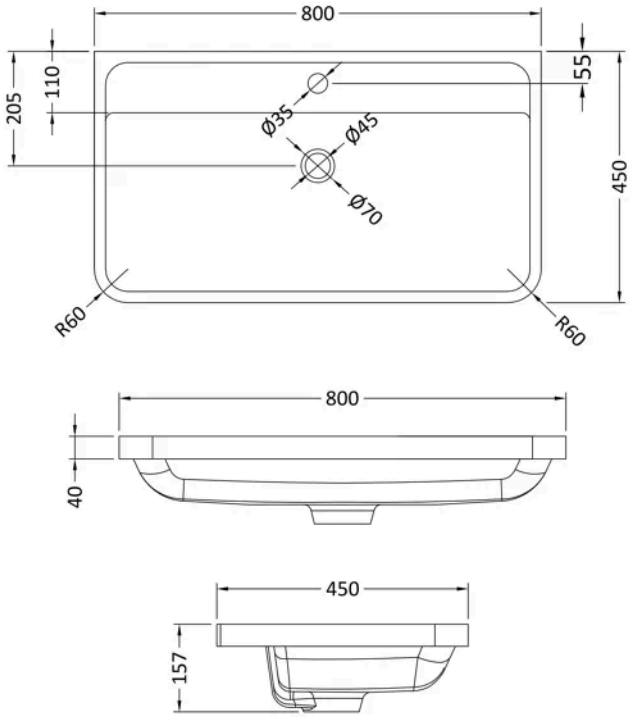

Product Dimensions

Product	157 x 450 x 800mm (H x W x D)
Packaged	167 x 840 x 470mm (H x W x D)
Nett Weight	18.12 kg
Packaged Weight	18.12 kg

Product Details

Country of Origin	China
Product Material	Polymarble
Colour/Finish	White
Style	Contemporary
Ce Certified	Yes
Inner Bowl Height	105 mm
No. Of Tapholes	1
Number Of Bowls	1
Overflow Included	Yes
Tap Included	No
Waste Included	No

© ROXOR Group