**Sales Code:** SOL302A **Barcode:** 5056211888390 **Brand:** Hudson Reed **Description:** Hudson Reed Solar 600mm 2 Drawer Indigo Blue Wall Hung Cabinet With Basin



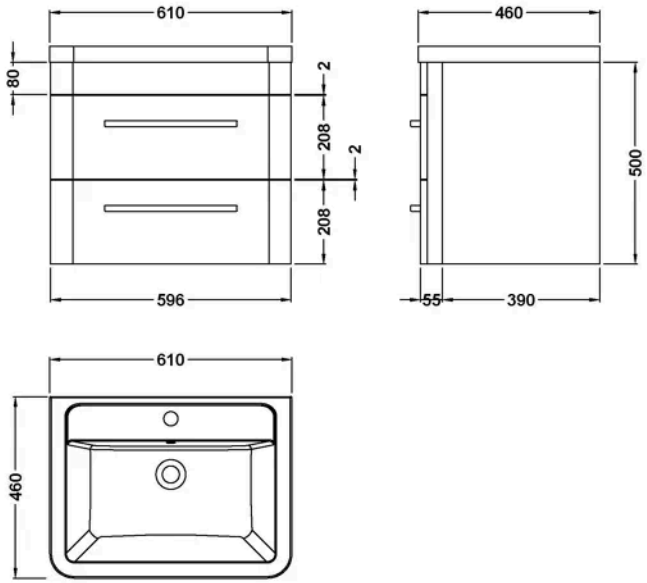


## Product Dimensions

| | |
|---|---|
| Product | 540 x 607 x 450mm (H x W x D) |
| Packaged | 550 x 550 x 550mm (H x W x D) |
| Nett Weight | 35.32 kg |
| Packaged Weight | 35.32 kg |

## Product Details

| | |
|---|---|
| Country of Origin | Republic of Ireland |
| Product Material | Mdf Vinyl Smooth Matt |
| Colour/Finish | Indigo Blue |
| Mount Type | Wall Hung |
| Style | Contemporary |
| Handle Type | D Shape |
| Construction Method | Cam & Wood Dowel |
| Construction Type | Rigid |
| Drawer Type | 80mm High Metal S/C Inc Gallery |
| Fascia Finish | Mdf Vinyl Smooth Matt |
| Fsc Certified | Yes |
| Handles Included | Yes |
| Inner Bowl Depth | 315 mm |
| Inner Bowl Height | 110 mm |
| Inner Bowl Width | 550 mm |
| Leg Set Included | No |
| Material Thickness | 18 mm |
| No. Drawers | 2 |
| No. Of Tapholes | 1 |
| Number Of Bowls | 1 |
| Overflow Cover Included | Yes |
| Overflow Included | Yes |
| Tap Included | No |
| Waste Included | No |
| Waste Shroud | Yes |

© ROXOR Group

**Sales Code:** CBM003 **Barcode:** 5056211875789 **Brand:** nuie **Description:** 1 Tap Hole 600mm Ceramic Curved Basin



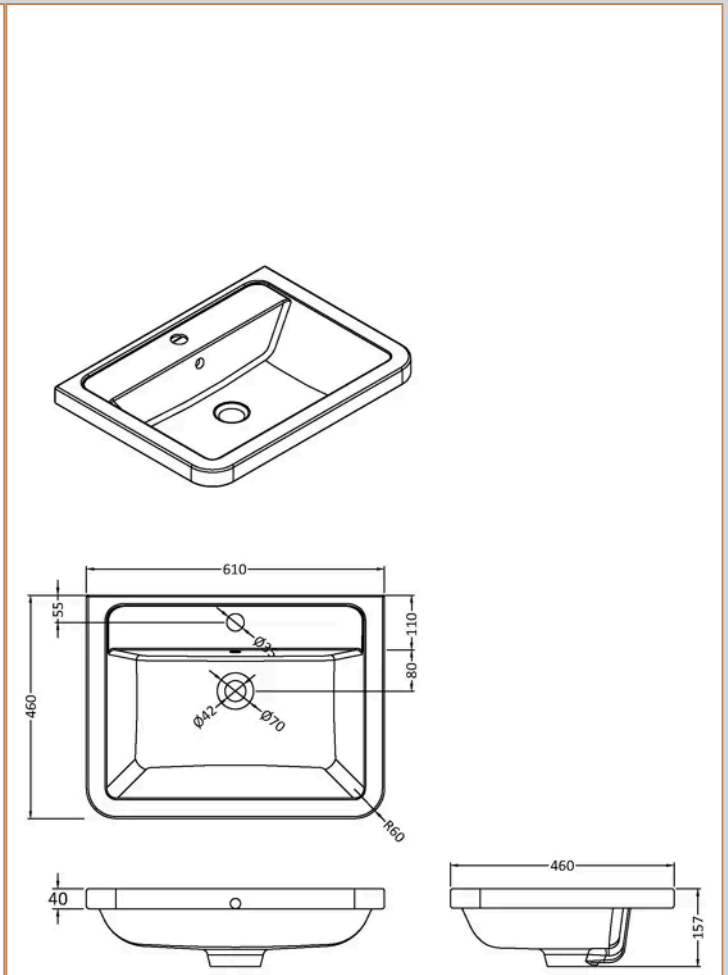


## Product Dimensions

| | |
|---|---|
| Product | 460 x 600 x 157mm (H x W x D) |
| Packaged | 167 x 640 x 470mm (H x W x D) |
| Nett Weight | 12.82 kg |
| Packaged Weight | 12.82 kg |

## Product Details

| | |
|---|---|
| Country of Origin | China |
| Product Material | Vitreous China |
| Colour/Finish | White |
| Style | Contemporary |
| Ce Certified | Yes |
| Inner Bowl Height | 110 mm |
| No. Of Tapholes | 1 |
| Number Of Bowls | 1 |
| Overflow Included | Yes |
| Tap Included | No |
| Waste Included | No |

© ROXOR Group

**Sales Code:** CUR393 **Barcode:** 5056211817864 **Brand:** Hudson Reed **Description:** Hudson Reed 600mm Indigo Blue 2 Drawer Wall Hung Vanity Unit



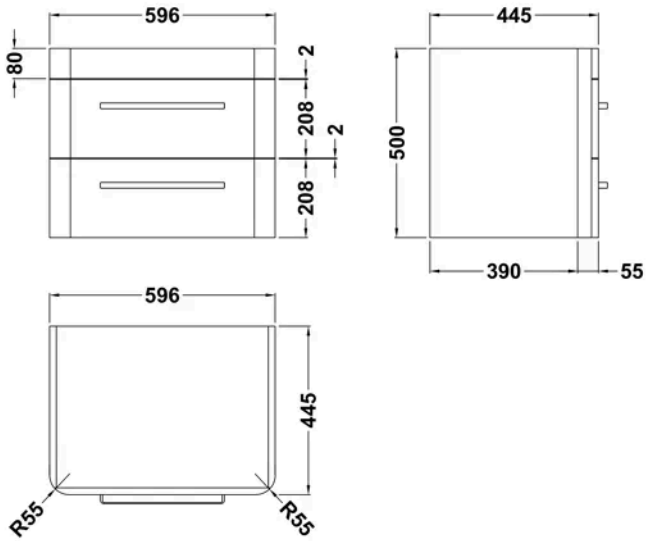


## Product Dimensions

| | |
|---|---|
| Product | 500 x 596 x 445mm (H x W x D) |
| Packaged | 570 x 670 x 510mm (H x W x D) |
| Nett Weight | 20.5 kg |
| Packaged Weight | 22.5 kg |

## Product Details

| | |
|---|---|
| Country of Origin | Republic of Ireland |
| Product Material | Mdf Vinyl Smooth Matt |
| Colour/Finish | Indigo Blue |
| Mount Type | Wall Hung |
| Style | Contemporary |
| Handle Type | D Shape |
| Construction Method | Cam & Wood Dowel |
| Construction Type | Rigid |
| Fascia Finish | Mdf Vinyl Smooth Matt |
| Fsc Certified | Yes |
| Handles Included | Yes |
| Leg Set Included | No |
| Material Thickness | 18 mm |
| No. Drawers | 2 |

© ROXOR Group