Sales Code: SOL101

Barcode: 5056211819226

Brand: Hudson Reed

Description: Hudson Reed Solar 600mm 2 Drawer Pure White Floor Standing Cabinet With Polymarble Basin



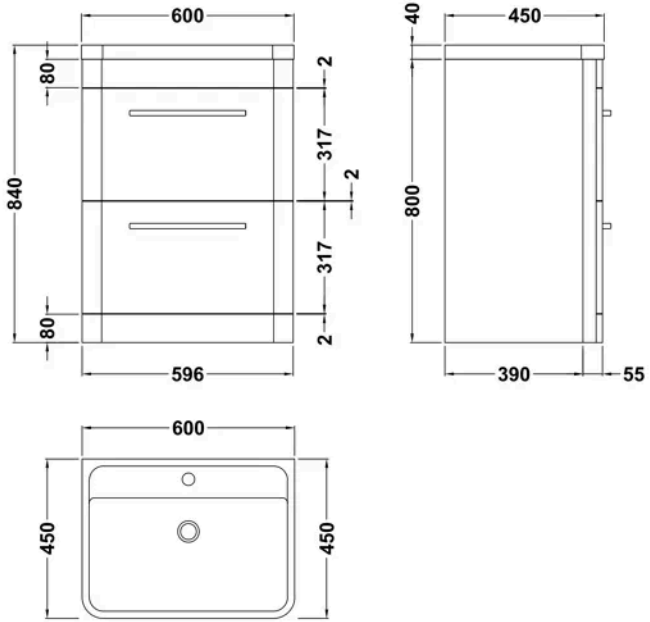

Product Dimensions

Product	840 x 600 x 450mm (H x W x D)
Packaged	840 x 640 x 480mm (H x W x D)
Nett Weight	45.32 kg
Packaged Weight	45.32 kg

Product Details

Country of Origin	Republic of Ireland
Product Material	Mdf Vinyl Smooth Matt
Colour/Finish	Pure White
Mount Type	Floor
Style	Contemporary
Handle Type	D Shape
Construction Method	Cam & Wood Dowel
Construction Type	Rigid
Drawer Type	80mm High Metal S/C Inc Gallery
Fascia Finish	Mdf Vinyl Smooth Matt
Fsc Certified	Yes
Handles Included	Yes
Inner Bowl Depth	315 mm
Inner Bowl Height	110 mm
Inner Bowl Width	550 mm
Leg Set Included	No
Material Thickness	18 mm
No. Drawers	2
No. Of Tapholes	1
Number Of Bowls	1
Overflow Cover Included	Yes
Overflow Included	Yes
Tap Included	No
Waste Included	No
Waste Shroud	Yes

© ROXOR Group

Sales Code: CUR133 **Barcode:** 5056211817819 **Brand:** Hudson Reed **Description:** Hudson Reed 600mm 2 Drawer Floor Standing Vanity Unit



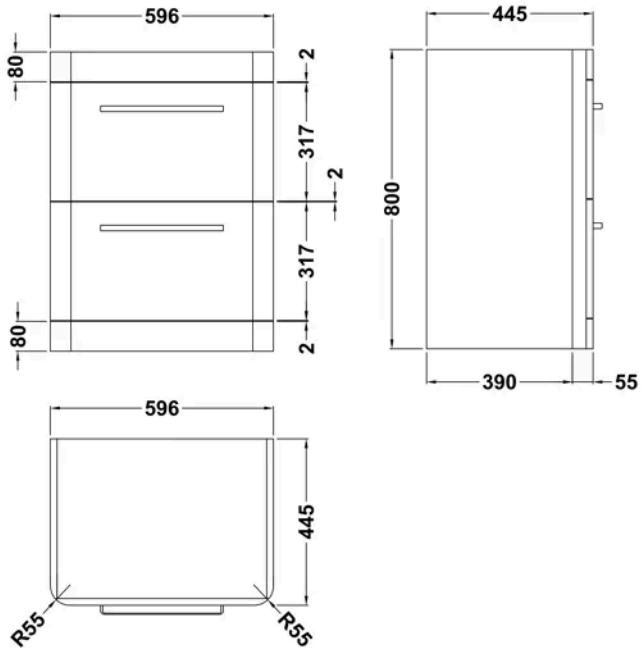

Product Dimensions

Product	800 x 596 x 445mm (H x W x D)
Packaged	870 x 670 x 510mm (H x W x D)
Nett Weight	31.5 kg
Packaged Weight	32.5 kg

Product Details

Country of Origin	Republic of Ireland
Product Material	Mdf Vinyl Smooth Matt
Colour/Finish	Pure White
Mount Type	Floor
Style	Contemporary
Handle Type	D Shape
Construction Method	Cam & Wood Dowel
Construction Type	Rigid
Drawer Type	80mm High Metal S/C Inc Gallery
Fascia Finish	Mdf Vinyl Smooth Matt
Fsc Certified	Yes
Handles Included	Yes
Leg Set Included	No
Material Thickness	18 mm
No. Drawers	2

© ROXOR Group

Sales Code: PMB003 **Barcode:** 5055369021734 **Brand:** nuie **Description:** 1 Tap Hole 600mm Polymarble Curved Basin



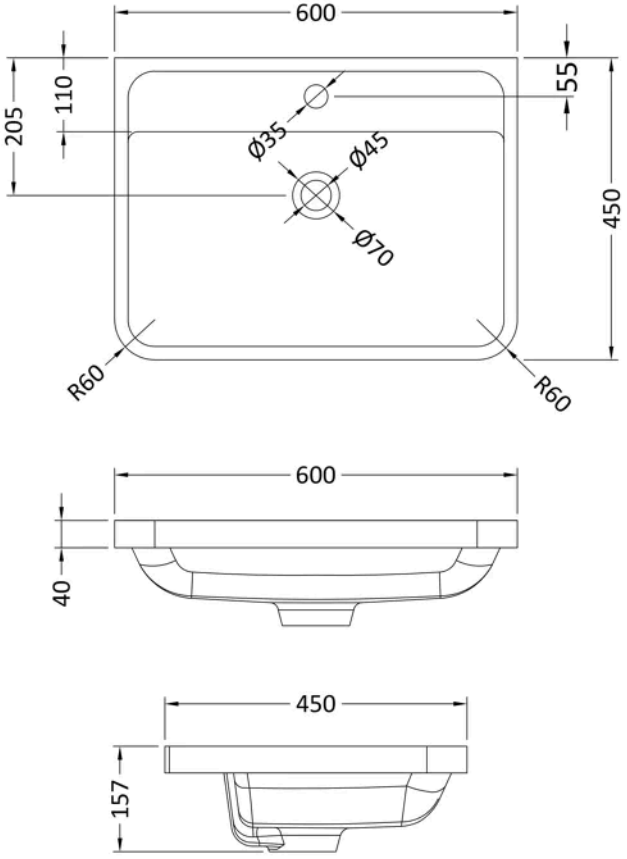

Product Dimensions

Product	157 x 450 x 600mm (H x W x D)
Packaged	167 x 640 x 470mm (H x W x D)
Nett Weight	12.82 kg
Packaged Weight	12.82 kg

Product Details

Country of Origin	China
Product Material	Polymarble
Colour/Finish	White
Style	Contemporary
Ce Certified	Yes
Inner Bowl Height	110 mm
No. Of Tapholes	1
Number Of Bowls	1
Overflow Included	Yes
Tap Included	No
Waste Included	No

© ROXOR Group