Sales Code: SBS81TW2

Barcode: 5056817792329

Brand: nuie

Description: nuie Windon Brushed Brass Twin Thermostatic Valve With Diverter, Square Wall-Mounted Shower Arm, Fixed Head And Bath Filler



Technical Drawing Not Available

Product Dimensions

Packaged	110 x 240 x 250mm (H x W x D)
Nett Weight	6.32 kg
Packaged Weight	6.32 kg

Packaging Details

Box Qty	4

Product Details

Country of Origin	China
Product Material	Abs,Brass,Stainless Steel
Control Type	Manual
WRAS Approved	Yes
Valve/Cartridge Type	1/4 Turn
Colour/Finish	Brushed Brass
Mount Type	Deck,Recessed/Wall,Surface
Style	Contemporary
Handle Type	Lever/Square
TMV2 Approved	Yes
TMV3 Approved	No
Handset Included	No
Head Included	Yes
Min Operating Pressure	0.1 Bar
No. Outlets	2.0000
Tmv2 Approval Number	2603035
Valve / Cartridge Type	1/4 Turn
Wras Approval No	250602040

© ROXOR Group

Sales Code: A8088 **Barcode:** 5056462620466 **Brand:** nuie **Description:** Brushed Brass Square Fixed Shower Head

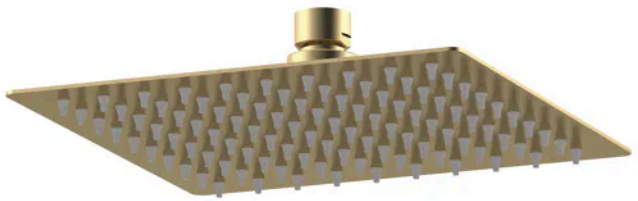

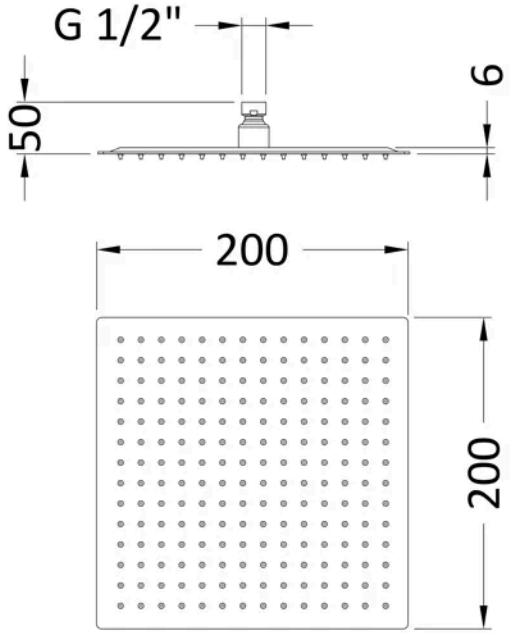

Product Dimensions

Product	60 x 200 x 200mm (H x W x D)
Packaged	210 x 100 x 210mm (H x W x D)
Outer Box	155 x 435 x 440mm (H x W x D)
Nett Weight	0.7 kg
Packaged Weight	0.7 kg

Packaging Details

Box Qty	1
Label Size (mm)	50 x 100
Label Colour	White
Label Qty	2.0000

Product Details

Country of Origin	China
Product Material	Stainless Steel
Control Type	Not Applicable
WRAS Approved	No
Colour/Finish	Brushed Brass
Mount Type	Surface/Wall
Style	Contemporary
Easy Clean	Yes
TMV2 Approved	No
TMV3 Approved	No
Handset Included	No
Head Included	Yes
Min Operating Pressure	0.5 Bar
No. Outlets	0.0000
Outlet Elbow Supplied	No

© ROXOR Group

Sales Code: ARM813 **Barcode:** 5056462620480 **Brand:** nuie **Description:** Brushed Brass Wall-Mounted Shower Arm

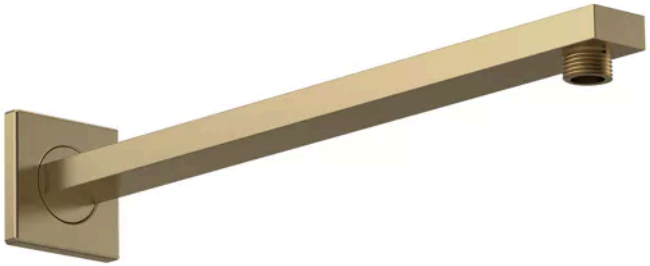

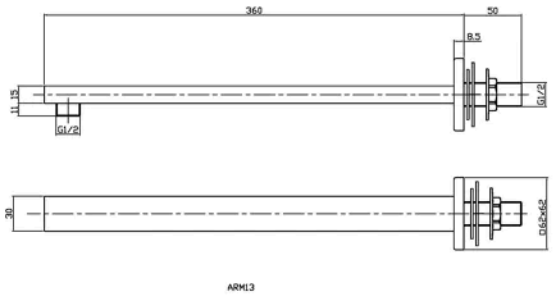

Product Dimensions

Product	62 x 62 x 410mm (H x W x D)
Packaged	40 x 10 x 420mm (H x W x D)
Outer Box	430 x 490 x 380mm (H x W x D)
Nett Weight	0.43 kg
Packaged Weight	0.43 kg

Packaging Details

Box Qty	1
Label Size (mm)	50 x 100
Label Colour	White
Label Qty	2.0000

Product Details

Country of Origin	China
Product Material	Brass
Colour/Finish	Brushed Brass
Style	Contemporary

© ROXOR Group

Sales Code: E801 **Barcode:** 5056678429198 **Brand:** nuie **Description:** nuie Brushed Brass Bath Filler



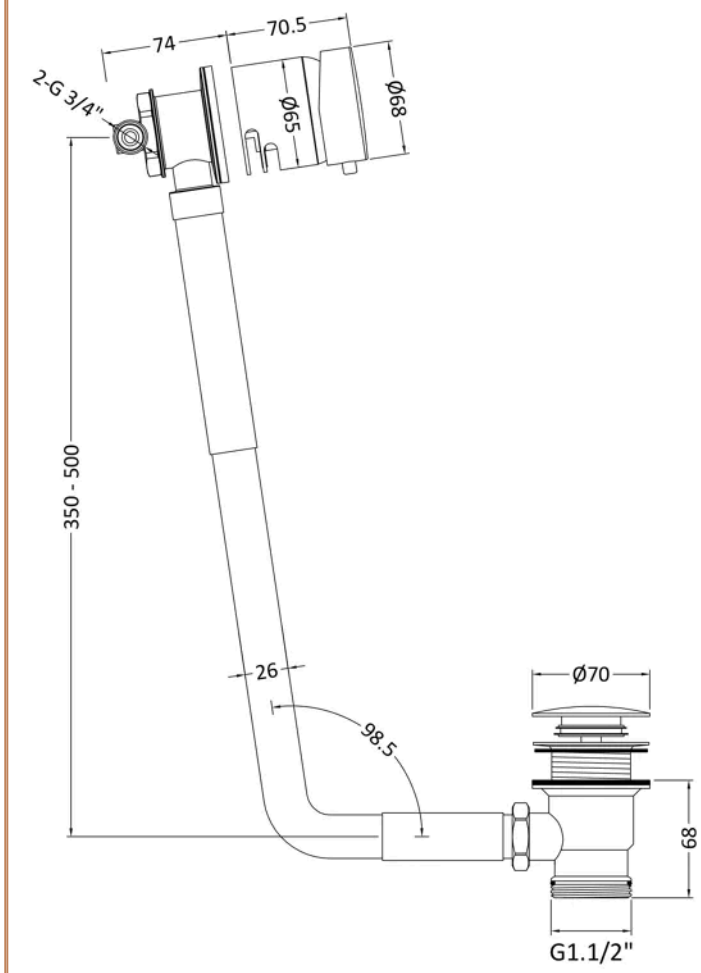

Product Dimensions

Product	550 x 68 x 74mm (H x W x D)
Packaged	120 x 200 x 320mm (H x W x D)
Nett Weight	2.29 kg
Packaged Weight	2.29 kg

Packaging Details

Box Qty	1

Product Details

Country of Origin	China
Product Material	Brass
Control Type	Manual
Colour/Finish	Brushed Brass
Mount Type	Deck
Style	Contemporary
Handle Type	Round
Waste Included	No

© ROXOR Group

Sales Code: WIN8TW02 **Barcode:** 5056462623146 **Brand:** nuie **Description:** nuie Windon Brushed Brass Twin Thermostatic Shower Valve With Diverter



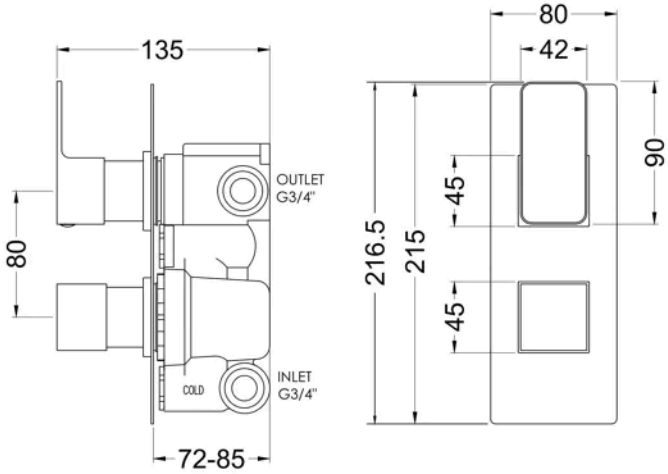

Product Dimensions

Product	217 x 80 x 135mm (H x W x D)
Packaged	110 x 240 x 250mm (H x W x D)
Outer Box	500 x 420 x 270mm (H x W x D)
Nett Weight	2.9 kg
Packaged Weight	2.9 kg

Packaging Details

Box Qty	1
Label Size (mm)	50 x 100
Label Colour	White
Label Qty	1.0000

Product Details

Country of Origin	United Kingdom
Product Material	Brass Abs
Control Type	Manual
WRAS Approved	Yes
Valve/Cartridge Type	1/4 Turn
Colour/Finish	Brushed Brass
Mount Type	Recessed/Wall
Style	Contemporary
Handle Type	Lever/Square
TMV2 Approved	Yes
TMV3 Approved	No
Pipe Size	22 mm (3/4" BSP)
Handset Included	No
Head Included	No
Min Operating Pressure	0.5 Bar
No. Outlets	2.0000
Outlet Elbow Supplied	No
Tmv2 Approval Number	2603035
Valve / Cartridge Type	1/4 Turn
Wras Approval No	250602040

© ROXOR Group