Sales Code: SBS42TW1 **Barcode:** 5056817792220 **Brand:** nuie **Description:** nuie Windon Matt Black Twin Thermostatic Valve And Square Slide Rail Kit



Technical Drawing Not Available

Product Dimensions

Packaged	110 x 240 x 250mm (H x W x D)
Nett Weight	4.08 kg
Packaged Weight	4.08 kg

Packaging Details

Box Qty	2

Product Details

Country of Origin	China
Product Material	Abs,Brass
Control Type	Manual
WRAS Approved	Yes
Valve/Cartridge Type	1/4 Turn
Colour/Finish	Matt Black
Mount Type	Recessed/Wall,Surface
Style	Contemporary
Handle Type	Lever/Square
TMV2 Approved	Yes
TMV3 Approved	No
Handset Included	Yes
Head Included	No
Hose Included	Yes
Hose Length	1500 mm
Min Operating Pressure	0.1 Bar
No. Outlets	1.0000
Tmv2 Approval Number	2603035
Valve / Cartridge Type	1/4 Turn
Wras Approval No	250602040

© ROXOR Group

Sales Code: A4167 **Barcode:** 5056462620459 **Brand:** nuie **Description:** nuie Matt Black Shower Slide Rail Kit



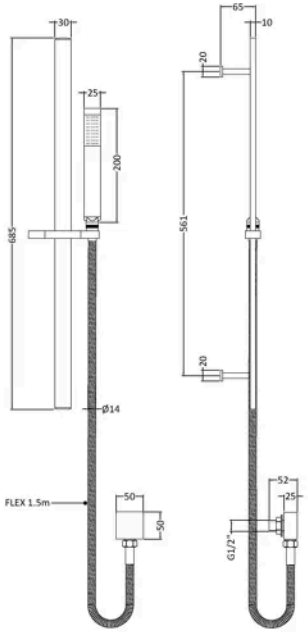

Product Dimensions

Product	685 x 129 x 65mm (H x W x D)
Packaged	83 x 140 x 700mm (H x W x D)
Outer Box	440 x 300 x 715mm (H x W x D)
Nett Weight	1.5 kg
Packaged Weight	1.51 kg

Packaging Details

Box Qty	1
Label Size (mm)	50 x 100
Label Colour	White
Label Qty	2.0000

Product Details

Country of Origin	China
Product Material	Brass Abs
Control Type	Not Applicable
WRAS Approved	No
Colour/Finish	Matt Black
Mount Type	Surface/Wall
Style	Contemporary
Easy Clean	No
TMV2 Approved	No
TMV3 Approved	No
Handset Included	Yes
Head Included	No
Hose Included	Yes
Hose Length	1500 mm
Min Operating Pressure	0.1 Bar
No. Outlets	1.0000
Outlet Elbow Supplied	Yes

© ROXOR Group

Sales Code: WIN4TW01 **Barcode:** 5056462623054 **Brand:** nuie **Description:** nuie Windon Matt Black Thermostatic Shower Valve



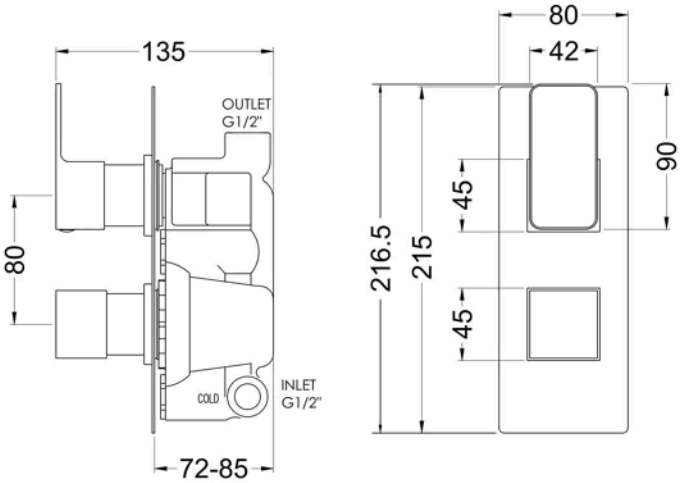

Product Dimensions

Product	217 x 80 x 135mm (H x W x D)
Packaged	110 x 240 x 250mm (H x W x D)
Outer Box	500 x 360 x 280mm (H x W x D)
Nett Weight	2.57 kg
Packaged Weight	2.57 kg

Packaging Details

Box Qty	1
Label Size (mm)	50 x 100
Label Colour	White
Label Qty	1.0000

Product Details

Country of Origin	United Kingdom
Product Material	Brass Abs
Control Type	Manual
WRAS Approved	Yes
Valve/Cartridge Type	1/4 Turn
Colour/Finish	Matt Black
Mount Type	Recessed/Wall
Style	Contemporary
Handle Type	Lever/Square
TMV2 Approved	Yes
TMV3 Approved	No
Handset Included	No
Head Included	No
Min Operating Pressure	0.1 Bar
No. Outlets	1.0000
Outlet Elbow Supplied	No
Tmv2 Approval Number	2603035
Valve / Cartridge Type	1/4 Turn
Wras Approval No	250602040

© ROXOR Group