Sales Code: SBS03TW2

Barcode: 5056817792398

Brand: nuie

Description: nuie Windon Chrome Twin Thermostatic Valve With Diverter, Square Wall-Mounted Shower Arm, Fixed Head And Handset Kit



Technical Drawing Not Available

Product Dimensions

Packaged	110 x 240 x 250mm (H x W x D)
Nett Weight	4.71 kg
Packaged Weight	4.71 kg

Packaging Details

Box Qty	4

Product Details

Country of Origin	China
Product Material	Abs,Brass,Stainless Steel
Control Type	Manual
WRAS Approved	Yes
Valve/Cartridge Type	1/4 Turn
Colour/Finish	Chrome
Mount Type	Recessed/Wall,Surface
Style	Contemporary
Handle Type	Lever/Square
TMV2 Approved	Yes
TMV3 Approved	No
Handset Included	Yes
Head Included	Yes
Hose Included	Yes
Hose Length	1500 mm
Min Operating Pressure	0.1 Bar
No. Outlets	2.0000
Tmv2 Approval Number	2603035
Valve / Cartridge Type	1/4 Turn
Wras Approval No	250602040

© ROXOR Group

Sales Code: A3088 **Barcode:** 5055146179948 **Brand:** nuie **Description:** Chrome Fixed Shower Head



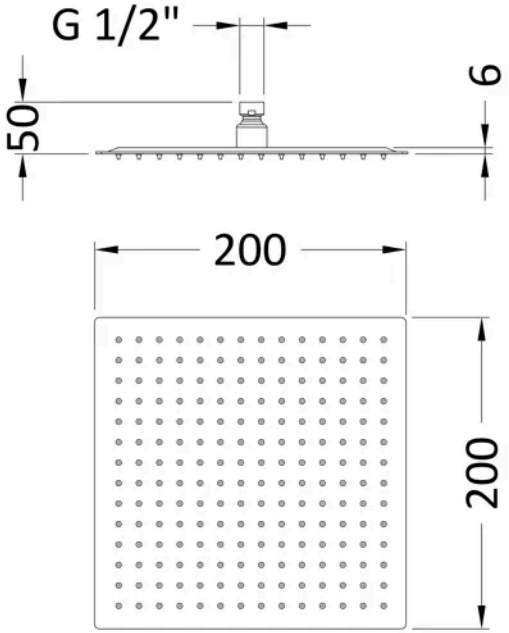

Product Dimensions

Product	60 x 200 x 200mm (H x W x D)
Packaged	210 x 100 x 210mm (H x W x D)
Outer Box	155 x 435 x 440mm (H x W x D)
Nett Weight	0.7 kg
Packaged Weight	0.7 kg

Packaging Details

Box Qty	1
Label Size (mm)	50 x 100
Label Colour	White
Label Qty	2.0000

Product Details

Country of Origin	China
Product Material	Stainless Steel
Control Type	Not Applicable
WRAS Approved	No
Colour/Finish	Chrome
Mount Type	Surface/Wall
Style	Contemporary
Easy Clean	Yes
TMV2 Approved	No
TMV3 Approved	No
Handset Included	No
Head Included	Yes
Min Operating Pressure	0.5 Bar
No. Outlets	1.0000
Outlet Elbow Supplied	No

© ROXOR Group

Sales Code: A3264 **Barcode:** 5055369016976 **Brand:** nuie **Description:** Chrome Shower Handset Kit Parking Bracket Kit Outlet Elbow



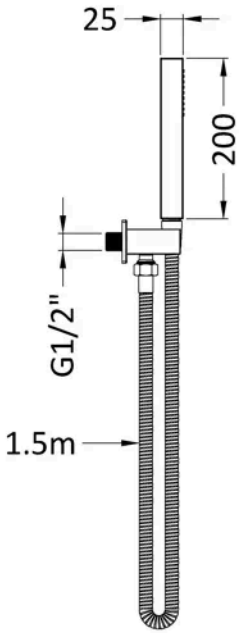

Product Dimensions

Product	1265 x 30 x 55mm (H x W x D)
Packaged	130 x 185 x 275mm (H x W x D)
Nett Weight	0.68 kg
Packaged Weight	0.68 kg

Packaging Details

Box Qty	1
Label Size (mm)	50 x 100
Label Colour	White
Label Qty	2.0000

Product Details

Country of Origin	United Kingdom
Product Material	Brass Abs
Control Type	Not Applicable
WRAS Approved	No
Colour/Finish	Chrome
Mount Type	Surface/Wall
Style	Contemporary
TMV2 Approved	No
TMV3 Approved	No
Handset Included	Yes
Head Included	No
Hose Included	Yes
Hose Length	1500 mm
Min Operating Pressure	0.1 Bar
Outlet Elbow Supplied	Yes

© ROXOR Group

Sales Code: ARM13 **Barcode:** 5055146196907 **Brand:** Hudson Reed **Description:** Hudson Reed 410mm Chrome Wall-Mounted Shower Arm



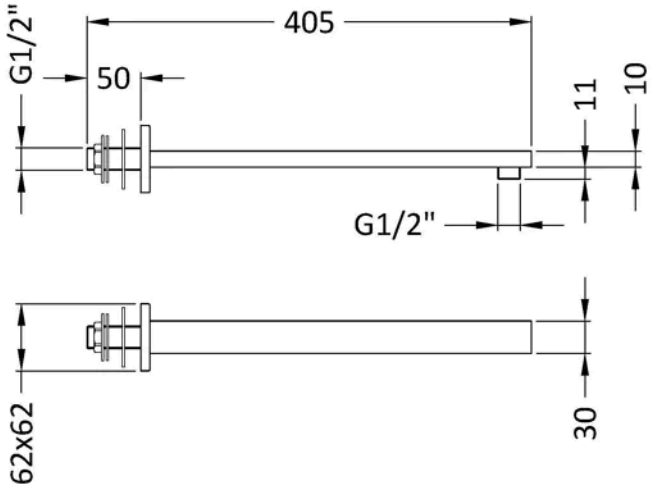

Product Dimensions

Product	20 x 30 x 410mm (H x W x D)
Packaged	40 x 10 x 420mm (H x W x D)
Outer Box	430 x 490 x 380mm (H x W x D)
Nett Weight	0.43 kg
Packaged Weight	0.43 kg

Packaging Details

Box Qty	1
Label Size (mm)	50 x 100
Label Colour	White
Label Qty	2.0000

Product Details

Country of Origin	China
Product Material	Brass
Colour/Finish	Chrome
Style	Contemporary

© ROXOR Group

Sales Code: WINTW02 **Barcode:** 5056211898399 **Brand:** nuie **Description:** nuie Windon Chrome Twin Thermostatic Shower Valve With Diverter

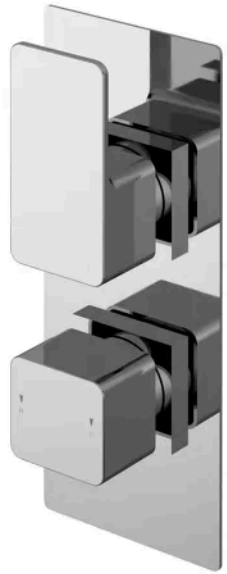

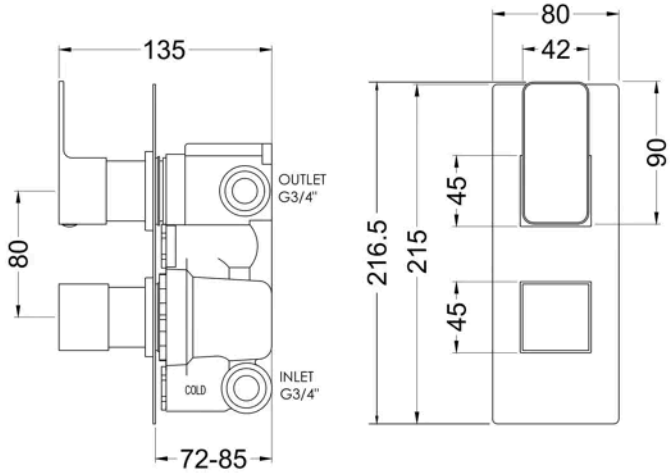

Product Dimensions

Product	217 x 80 x 135mm (H x W x D)
Packaged	110 x 240 x 250mm (H x W x D)
Outer Box	500 x 420 x 270mm (H x W x D)
Nett Weight	2.9 kg
Packaged Weight	2.9 kg

Packaging Details

Box Qty	1
Label Size (mm)	50 x 100
Label Colour	White
Label Qty	1.0000

Product Details

Country of Origin	China
Product Material	Brass Abs
Control Type	Manual
WRAS Approved	Yes
Valve/Cartridge Type	1/4 Turn
Colour/Finish	Chrome
Mount Type	Recessed/Wall
Style	Contemporary
Handle Type	Lever/Square
TMV2 Approved	Yes
TMV3 Approved	No
Pipe Size	22 mm (3/4" BSP)
Handset Included	No
Head Included	No
Min Operating Pressure	0.5 Bar
No. Outlets	2.0000
Outlet Elbow Supplied	No
Tmv2 Approval Number	2603035
Valve / Cartridge Type	1/4 Turn
Wras Approval No	250602040

© ROXOR Group