Sales Code: SBR24TR2

Barcode: 5056462601779

Brand: nuie

Description: nuie Chrome Concealed Round Double Outlet Shower System With Slide Rail Kit & Fixed Head



Technical Drawing Not Available

Product Dimensions

Product	595 x 168 x 71mm (H x W x D)
Packaged	550 x 550 x 550mm (H x W x D)
Nett Weight	5.07 kg
Packaged Weight	5.57 kg

Packaging Details

Box Qty	5

Product Details

Country of Origin	China
Product Material	Brass Abs
Control Type	Manual
Valve/Cartridge Type	Single Lever Cartridge
Colour/Finish	Chrome
Style	Contemporary
Min Operating Pressure	0.1 Bar
No. Of Body Jets	0.0000
Valve / Cartridge Type	Single Lever Cartridge

© ROXOR Group

Sales Code: A3082 **Barcode:** 5055146179887 **Brand:** Hudson Reed **Description:** Chrome Fixed Shower Head



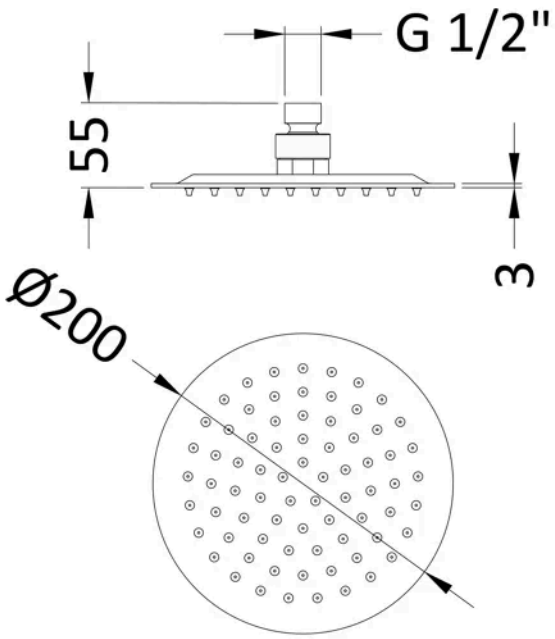

Product Dimensions

Product	56 x 200 x 200mm (H x W x D)
Packaged	210 x 100 x 210mm (H x W x D)
Outer Box	430 x 500 x 230mm (H x W x D)
Nett Weight	0.92 kg
Packaged Weight	0.92 kg

Packaging Details

Box Qty	1
Label Size (mm)	50 x 100
Label Colour	White
Label Qty	2.0000

Product Details

Country of Origin	China
Product Material	Stainless Steel
Control Type	Not Applicable
WRAS Approved	No
Colour/Finish	Chrome
Mount Type	Surface/Wall
Style	Contemporary
TMV2 Approved	No
TMV3 Approved	No
Handset Included	No
Head Included	Yes
Min Operating Pressure	0.5 Bar
No. Outlets	1.0000
Outlet Elbow Supplied	No

© ROXOR Group

Sales Code: A3203 **Barcode:** 5055146110200 **Brand:** nuie **Description:** Chrome Outlet Elbow



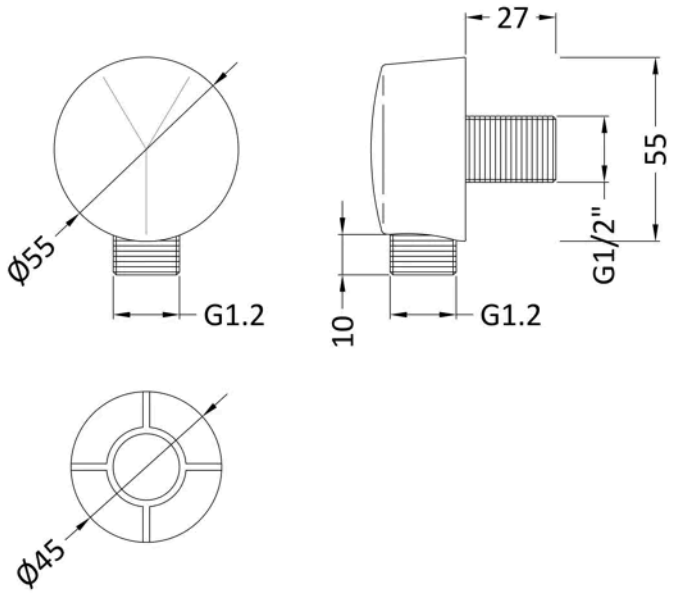

Product Dimensions

Product	53 x 53 x 26mm (H x W x D)
Packaged	55 x 55 x 80mm (H x W x D)
Outer Box	250 x 300 x 420mm (H x W x D)
Nett Weight	0.2 kg
Packaged Weight	0.2 kg

Packaging Details

Box Qty	1
Label Size (mm)	50 x 100
Label Colour	White
Label Qty	2.0000

Product Details

Country of Origin	China
Product Material	Abs
Colour/Finish	Chrome
Style	Contemporary

© ROXOR Group

Sales Code: ARM01 **Barcode:** 5055146185604 **Brand:** nuie **Description:** Chrome Wall-Mounted Shower Arm



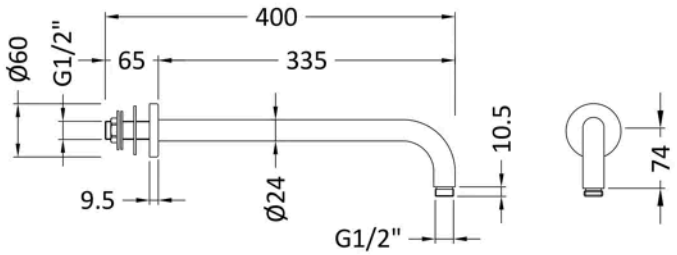

Product Dimensions

Product	104 x 62 x 395mm (H x W x D)
Packaged	420 x 38 x 102mm (H x W x D)
Outer Box	385 x 220 x 430mm (H x W x D)
Nett Weight	0.32 kg
Packaged Weight	0.5 kg

Packaging Details

Box Qty	1
Label Size (mm)	50 x 100
Label Colour	White
Label Qty	2.0000

Product Details

Country of Origin	China
Product Material	Brass
Colour/Finish	Chrome
Style	Contemporary

© ROXOR Group

Sales Code: ARVTR02 **Barcode:** 5056211898696 **Brand:** nuie **Description:** nuie Arvan Chrome Triple Thermostatic Shower Valve



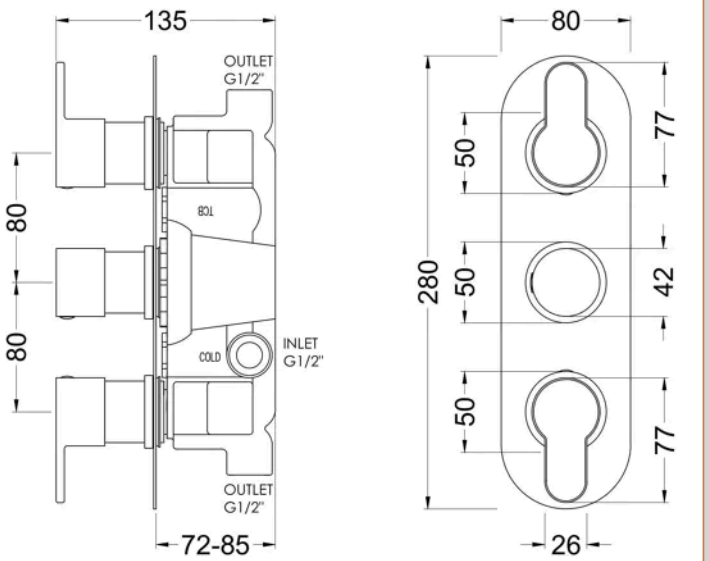

Product Dimensions

Product	280 x 80 x 135mm (H x W x D)
Packaged	110 x 250 x 320mm (H x W x D)
Outer Box	370 x 520 x 340mm (H x W x D)
Nett Weight	3.45 kg
Packaged Weight	3.45 kg

Packaging Details

Box Qty	1
Label Size (mm)	50 x 100
Label Colour	White
Label Qty	1.0000

Product Details

Country of Origin	China
Product Material	Brass Abs
Control Type	Manual
WRAS Approved	Yes
Valve/Cartridge Type	1/4 Turn
Colour/Finish	Chrome
Mount Type	Recessed/Wall
Style	Contemporary
Handle Type	Lever/Round
TMV2 Approved	Yes
TMV3 Approved	No
Pipe Size	15 mm & 22 mm
Handset Included	No
Head Included	No
Min Operating Pressure	0.1 Bar
No. Outlets	2.0000
Outlet Elbow Supplied	No
Tmv2 Approval Number	2603035
Valve / Cartridge Type	1/4 Turn
Wras Approval No	250602040

© ROXOR Group

Sales Code: JTY034 **Barcode:** 5055369034819 **Brand:** nuie **Description:** nuie Chrome Shower Slide Rail Kit



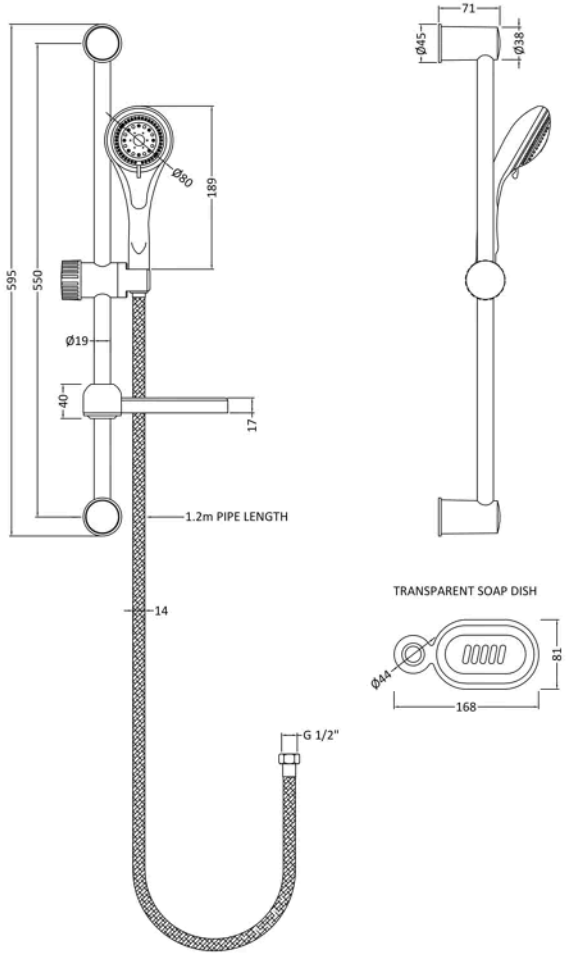

Product Dimensions

Product	595 x 168 x 71mm (H x W x D)
Packaged	70 x 110 x 560mm (H x W x D)
Nett Weight	0.68 kg
Packaged Weight	0.68 kg

Packaging Details

Box Qty	1
Label Size (mm)	50 x 100
Label Colour	White
Label Qty	2.0000

Product Details

Country of Origin	China
Product Material	Brass Abs
Control Type	Not Applicable
WRAS Approved	No
Colour/Finish	Chrome
Mount Type	Surface/Wall
Style	Contemporary
Easy Clean	Yes
TMV2 Approved	No
TMV3 Approved	No
Handset Included	Yes
Head Included	No
Hose Included	Yes
Hose Length	1500 mm
Min Operating Pressure	0.1 Bar
No. Outlets	1.0000
Outlet Elbow Supplied	No

© ROXOR Group