Sales Code: SBM111L **Barcode:** 5056678424322 **Brand:** nuie **Description:** 1 Tap Hole 1100mm White Left Hand Stone Furniture Basin



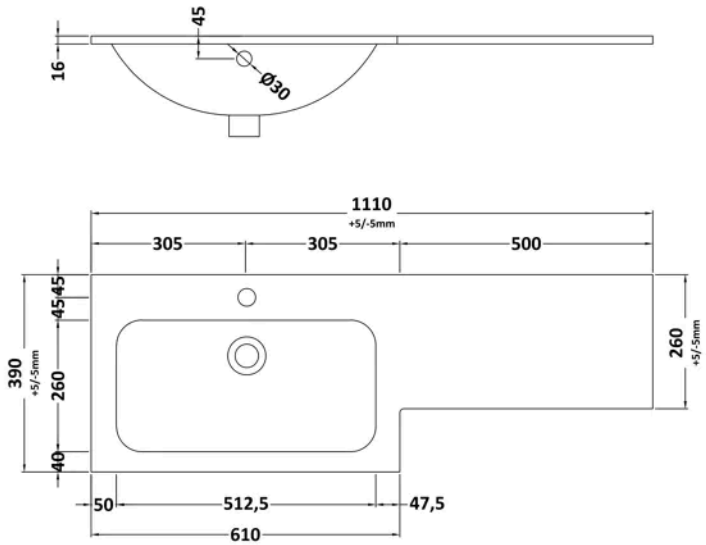

Product Dimensions

Product	16 x 1110 x 390mm (H x W x D)
Packaged	200 x 1175 x 460mm (H x W x D)
Nett Weight	16.5 kg
Packaged Weight	17 kg

Packaging Details

Box Qty	1

Product Details

Country of Origin	China
Product Material	Stone
Colour/Finish	Matt White
Style	Contemporary
Bottle Trap Included	No
Ce Certified	Yes
Inner Bowl Height	260 mm
No. Of Tapholes	1
Number Of Bowls	1
Overflow Cover Included	No
Overflow Included	No
Tap Included	No
Waste Included	No

© ROXOR Group