Sales Code: SBDE011 **Barcode:** 5056817720285 **Brand:** BC Designs **Description:** BC Designs Solid Blue 1800mm x 800mm Round Double Ended Bath With Legs



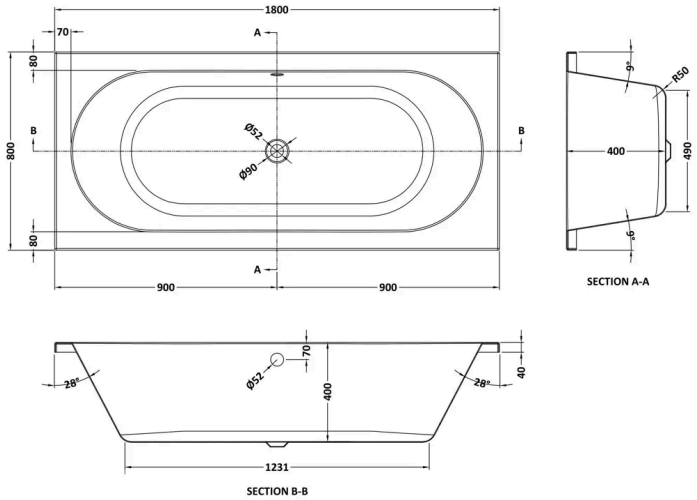

Product Dimensions

Product	400 x 800 x 1800mm (H x W x L)
Packaged	440 x 810 x 1870mm (H x W x D)
Nett Weight	32 kg
Packaged Weight	32 kg

Packaging Details

Box Qty	1
Label Size (mm)	50 x 100
Label Colour	White
Label Qty	2.0000

Product Details

Volume	210 Litre
Country of Origin	Egypt
Product Material	Acrylic Eternalite
Colour/Finish	White
Style	Contemporary
Fixings Included	No
Bath Panel Included	No
Ce Certified	Yes
Declaration Of Performance	Yes
Displaced Capacity	140 Litre
Includes Grips	No
Leg Set Included	Yes
No. Of Tapholes	No Tapholes
Overflow Included	No
Tap Included	No
Waste Included	No

© ROXOR Group