Sales Code: RSE3094WMT2

Barcode: 5056817722371

Brand: nuie Lux

Description: nuie lux Roseburn 1200mm Bleached Oak 2 Drawer Wall Hung Vanity Unit With White Marble Worktop



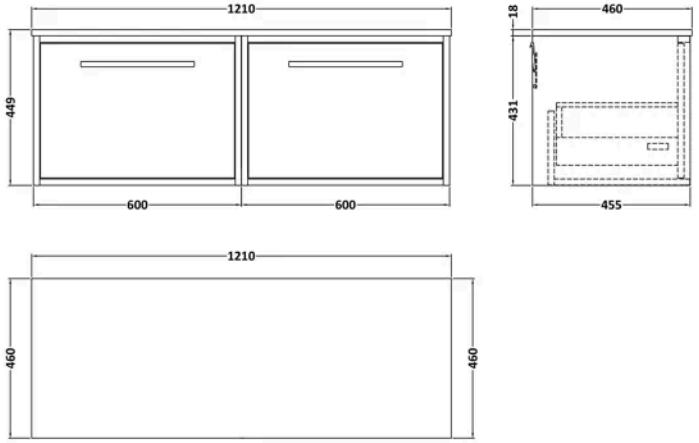

Product Dimensions

Product	449 x 1210 x 460mm (H x W x D)
Packaged	465 x 1220 x 475mm (H x W x D)
Nett Weight	59 kg
Packaged Weight	59 kg

Product Details

Country of Origin	United Kingdom
Product Material	Mfc Textured Woodgrain,Natural Marble
Colour/Finish	Bleached Oak
Mount Type	Wall Hung
Style	Contemporary
Handle Type	D Shape
Fixings Included	Yes
Construction Method	Cam & Wood Dowel
Construction Type	Rigid
Drawer Type	80mm High Metal S/C Inc Gallery
Fascia Finish	Mdf Vinyl Textured Woodgrain
Fsc Certified	Yes
Handles Included	Yes
Material Thickness	18 mm
No. Drawers	2
Waste Shroud	Yes

© ROXOR Group

Sales Code: MFBT11246 **Barcode:** 5056678472972 **Brand:** BC Designs **Description:** BC Designs 1210 x 460mm Marble Top

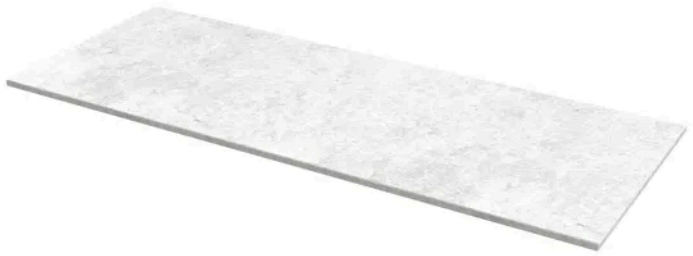

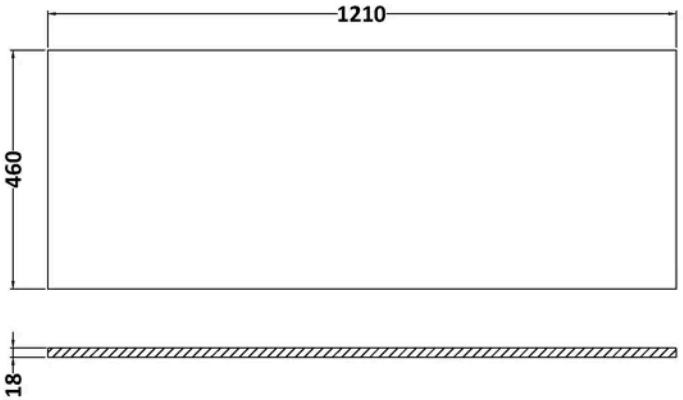

Product Dimensions

Product	14 x 1210 x 460mm (H x W x D)
Packaged	35 x 1250 x 500mm (H x W x D)
Nett Weight	25.5 kg
Packaged Weight	26 kg

Packaging Details

Box Qty	1
Label Size (mm)	50 x 100
Label Colour	White
Label Qty	1.0000

Product Details

Country of Origin	China
Product Material	Natural Marble
Colour/Finish	White
Style	Contemporary
Fixings Included	No
Fsc Certified	Yes
Material Thickness	14 mm

© ROXOR Group

Sales Code: ROS3094 **Barcode:** 5056678477557 **Brand:** nuie Lux **Description:** nuie lux Roseburn 600mm Bleached Oak 1 Drawer Wall Hung Vanity Unit



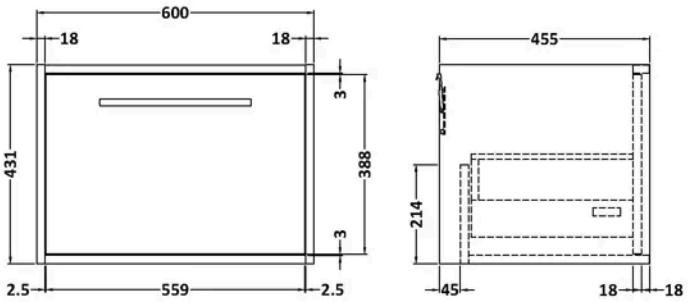

Product Dimensions

Product	359 x 455 x 600mm (H x W x D)
Packaged	470 x 620 x 475mm (H x W x D)
Nett Weight	16 kg
Packaged Weight	16.5 kg

Product Details

Country of Origin	United Kingdom
Product Material	Mfc Textured Woodgrain
Colour/Finish	Bleached Oak
Mount Type	Wall Hung
Style	Contemporary
Handle Type	D Shape
Fixings Included	Yes
Construction Method	Cam & Wood Dowel
Construction Type	Rigid
Drawer Type	80mm High Metal S/C Inc Gallery
Fascia Finish	Mdf Vinyl Textured Woodgrain
Fsc Certified	Yes
Handles Included	Yes
Material Thickness	18 mm
No. Drawers	1

© ROXOR Group