Sales Code: RSE3094Q **Barcode:** 5056883753187 **Brand:** nuie Lux **Description:** nuie lux Roseburn Bleached Oak 800mm Wall Hung 1-Drawer Unit & Stone Basin 1TH



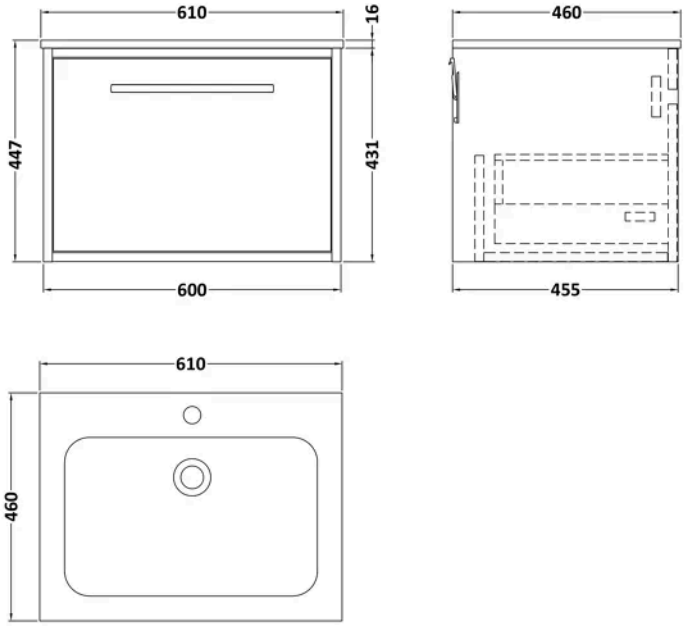

Product Dimensions

Product	447 x 810 x 460mm (H x W x D)
Packaged	470 x 620 x 475mm (H x W x D)
Nett Weight	30.5 kg
Packaged Weight	30.5 kg

Product Details

Country of Origin	United Kingdom
Product Material	Mfc Textured Woodgrain,Stone
Colour/Finish	Bleached Oak
Mount Type	Wall Hung
Style	Contemporary
Construction Method	Cam & Wood Dowel
Construction Type	Rigid
Fascia Finish	Mdf Vinyl Textured Woodgrain
Handles Included	Yes
Inner Bowl Height	128 mm
Leg Set Included	No
Material Thickness	18 mm
No. Drawers	1
No. Of Tapholes	1
Number Of Bowls	1
Overflow Cover Included	Yes
Overflow Included	Yes
Tap Included	No
Waste Included	No
Waste Shroud	No

© ROXOR Group

Sales Code: LXSB903 **Barcode:** 5056883750476 **Brand:** nuie Lux **Description:** 610 x 460mm Basin 1T/H



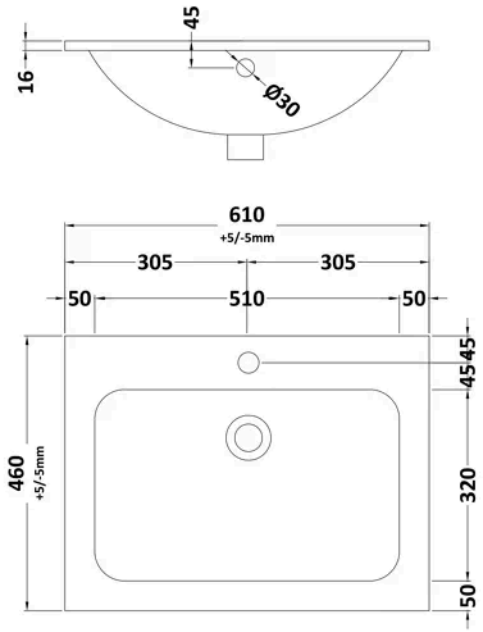

Product Dimensions

Product	610 x 460mm (W x D)
Packaged	200 x 675 x 530mm (H x W x D)
Nett Weight	13.5 kg
Packaged Weight	14 kg

Packaging Details

Box Qty	1

Product Details

Country of Origin	China
Product Material	Stone
Colour/Finish	Carrera Marble
Style	Contemporary
Bottle Trap Included	No
Ce Certified	Yes
Inner Bowl Depth	320 mm
Inner Bowl Height	128 mm
Inner Bowl Width	510 mm
No. Of Tapholes	1
Number Of Bowls	1
Overflow Cover Included	Yes
Overflow Included	Yes
Tap Included	No
Waste Included	No

© ROXOR Group

Sales Code: ROS3094 **Barcode:** 5056678477557 **Brand:** nuie Lux **Description:** nuie lux Roseburn 600mm Bleached Oak 1 Drawer Wall Hung Vanity Unit



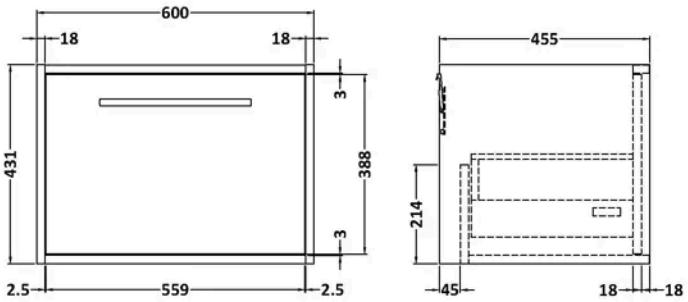

Product Dimensions

Product	359 x 455 x 600mm (H x W x D)
Packaged	470 x 620 x 475mm (H x W x D)
Nett Weight	16 kg
Packaged Weight	16.5 kg

Product Details

Country of Origin	United Kingdom
Product Material	Mfc Textured Woodgrain
Colour/Finish	Bleached Oak
Mount Type	Wall Hung
Style	Contemporary
Handle Type	D Shape
Fixings Included	Yes
Construction Method	Cam & Wood Dowel
Construction Type	Rigid
Drawer Type	80mm High Metal S/C Inc Gallery
Fascia Finish	Mdf Vinyl Textured Woodgrain
Fsc Certified	Yes
Handles Included	Yes
Material Thickness	18 mm
No. Drawers	1

© ROXOR Group