**Sales Code:** RSE2696A

**Barcode:** 5056817704230

**Brand:** nuie Lux

**Description:** nuie lux Roseburn 800mm Metallic Slate 1 Drawer Wall Hung Vanity Unit With 1 Tap Hole Fireclay Basin



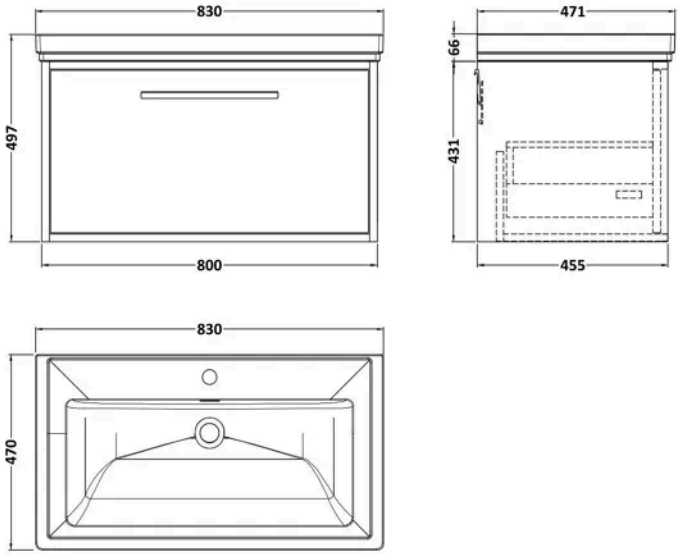


## Product Dimensions

| | |
|---|---|
| Product | 496 x 830 x 471mm (H x W x D) |
| Packaged | 470 x 820 x 475mm (H x W x D) |
| Nett Weight | 42 kg |
| Packaged Weight | 42 kg |

## Product Details

| | |
|---|---|
| Country of Origin | United Kingdom |
| Product Material | Fireclay,Mfc Textured Woodgrain |
| Colour/Finish | Metallic Slate |
| Mount Type | Wall Hung |
| Style | Contemporary |
| Handle Type | D Shape |
| Fixings Included | Yes |
| Construction Method | Cam & Wood Dowel |
| Construction Type | Rigid |
| Drawer Type | 80mm High Metal S/C Inc Gallery |
| Fascia Finish | Mdf Vinyl Textured Matt |
| Fsc Certified | Yes |
| Handles Included | Yes |
| Inner Bowl Height | 134 mm |
| Material Thickness | 18 mm |
| No. Drawers | 1 |
| No. Of Tapholes | 1 |
| Number Of Bowls | 1 |
| Overflow Cover Included | Yes |
| Overflow Included | Yes |
| Tap Included | No |
| Waste Included | No |

© ROXOR Group

**Sales Code:** FFB505 **Barcode:** 5056678471180 **Brand:** BC Designs **Description:** BC Designs 800mm 1 Tap Hole Traditional Fireclay Basin



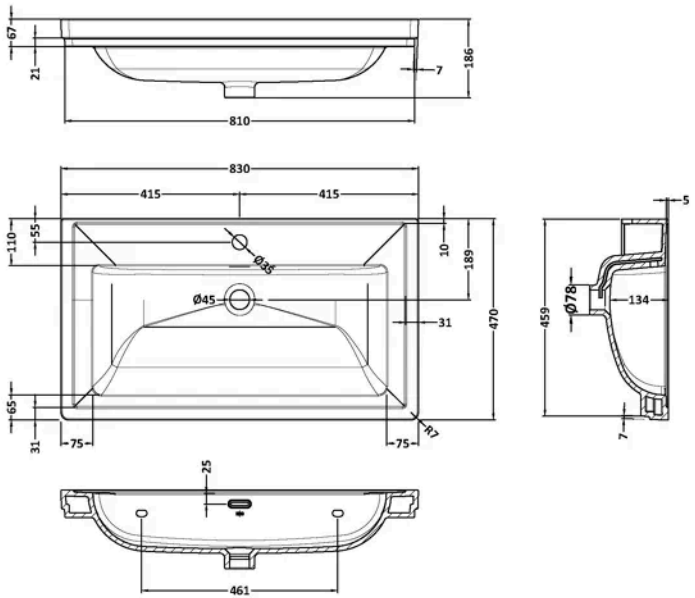


## Product Dimensions

| | |
|---|---|
| Product | 186 x 830 x 470mm (H x W x D) |
| Packaged | 492 x 860 x 205mm (H x W x D) |
| Nett Weight | 22.2 kg |
| Packaged Weight | 22.5 kg |

## Packaging Details

| | |
|---|---|
| Box Qty | 1 |

## Product Details

| | |
|---|---|
| Country of Origin | United Arab Emirates |
| Product Material | Fireclay |
| Colour/Finish | White |
| Style | Contemporary |
| Ce Certified | Yes |
| Inner Bowl Height | 134 mm |
| No. Of Tapholes | 1 |
| Number Of Bowls | 1 |
| Overflow Included | Yes |
| Tap Included | No |
| Waste Included | No |

© ROXOR Group

**Sales Code:** ROS2696 **Barcode:** 5056678470879 **Brand:** BC Designs **Description:** nuie lux Roseburn 800mm Metallic Slate 1 Drawer Wall Hung Vanity Unit



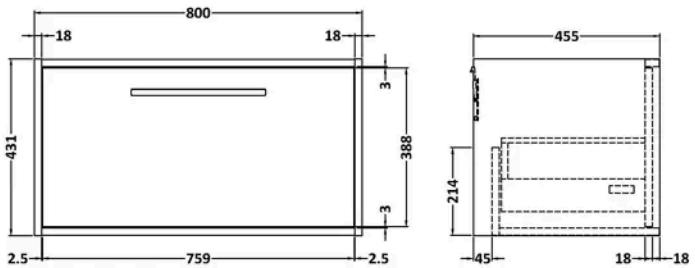


## Product Dimensions

| | |
|---|---|
| Product | 359 x 455 x 800mm (H x W x D) |
| Packaged | 470 x 820 x 475mm (H x W x D) |
| Nett Weight | 19 kg |
| Packaged Weight | 19.5 kg |

## Product Details

| | |
|---|---|
| Country of Origin | United Kingdom |
| Product Material | Mfc Textured Matt |
| Colour/Finish | Metallic Slate |
| Mount Type | Wall Hung |
| Style | Contemporary |
| Handle Type | D Shape |
| Fixings Included | Yes |
| Construction Method | Cam & Wood Dowel |
| Construction Type | Rigid |
| Drawer Type | 80mm High Metal S/C Inc Gallery |
| Fascia Finish | Mdf Vinyl Textured Matt |
| Fsc Certified | Yes |
| Handles Included | Yes |
| Material Thickness | 18 mm |
| No. Drawers | 1 |

© ROXOR Group