**Sales Code:** RSE2694GMT

**Barcode:** 5056817703813

**Brand:** nuie Lux

**Description:** nuie lux Roseburn 600mm Metallic Slate 1 Drawer Wall Hung Vanity Unit With Grey Marble Worktop



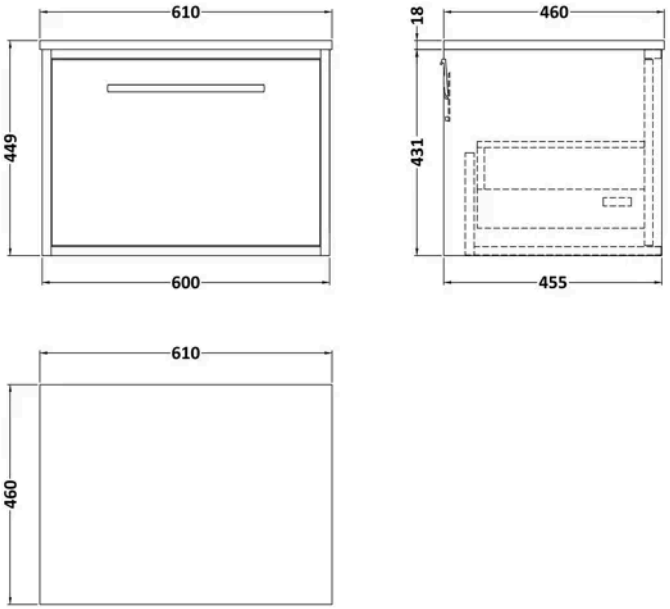


## Product Dimensions

| | |
|---|---|
| Product | 449 x 610 x 460mm (H x W x D) |
| Packaged | 470 x 620 x 475mm (H x W x D) |
| Nett Weight | 30.5 kg |
| Packaged Weight | 30.5 kg |

## Product Details

| | |
|---|---|
| Country of Origin | United Kingdom |
| Product Material | Mfc Textured Matt,Natural Marble |
| Colour/Finish | Metallic Slate |
| Mount Type | Wall Hung |
| Style | Contemporary |
| Handle Type | D Shape |
| Fixings Included | Yes |
| Construction Method | Cam & Wood Dowel |
| Construction Type | Rigid |
| Drawer Type | 80mm High Metal S/C Inc Gallery |
| Fascia Finish | Mdf Vinyl Textured Matt |
| Fsc Certified | Yes |
| Handles Included | Yes |
| Material Thickness | 18 mm |
| No. Drawers | 1 |

© ROXOR Group

**Sales Code:** MFBT36046 **Barcode:** 5056678473757 **Brand:** BC Designs **Description:** BC Designs 610 x 460mm Grey Marble Top



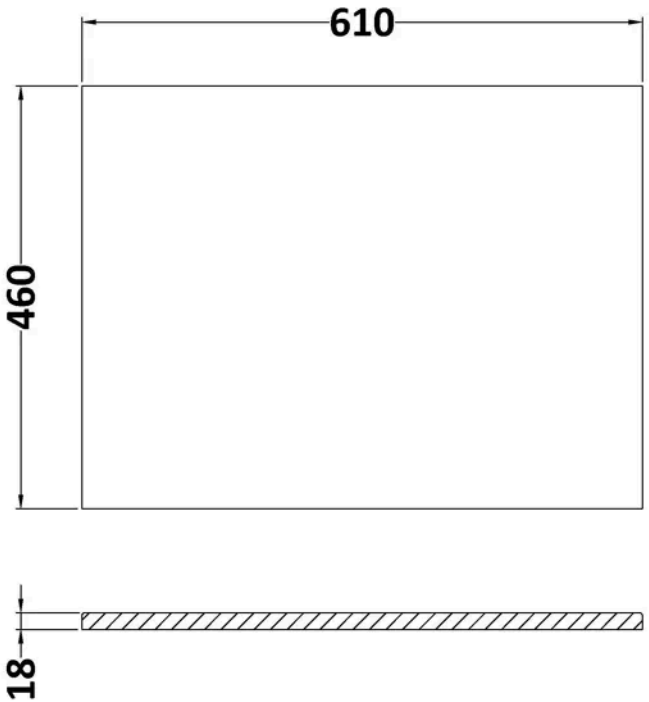


## Product Dimensions

| | |
|---|---|
| Product | 18 x 610 x 460mm (H x W x D) |
| Packaged | 35 x 650 x 500mm (H x W x D) |
| Nett Weight | 13.5 kg |
| Packaged Weight | 14 kg |

## Packaging Details

| | |
|---|---|
| Box Qty | 1 |
| Label Size (mm) | 50 x 100 |
| Label Colour | White |
| Label Qty | 1.0000 |

## Product Details

| | |
|---|---|
| Country of Origin | China |
| Product Material | Natural Marble |
| Colour/Finish | Grey |
| Style | Contemporary |
| Fixings Included | No |
| Fsc Certified | Yes |
| Material Thickness | 18 mm |

© ROXOR Group

**Sales Code:** ROS2694 **Barcode:** 5056678470848 **Brand:** BC Designs **Description:** nuie lux Roseburn 600mm Metallic Slate 1 Drawer Wall Hung Vanity Unit



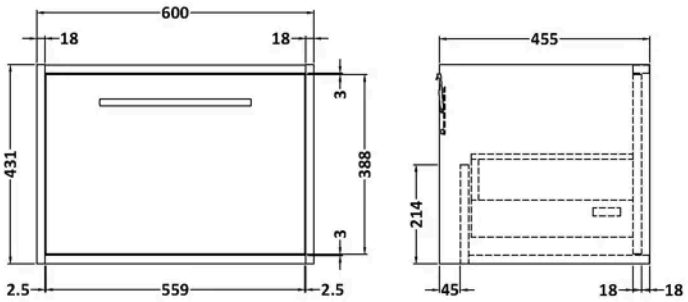


## Product Dimensions

| | |
|---|---|
| Product | 359 x 455 x 600mm (H x W x D) |
| Packaged | 470 x 620 x 475mm (H x W x D) |
| Nett Weight | 16 kg |
| Packaged Weight | 16.5 kg |

## Product Details

| | |
|---|---|
| Country of Origin | United Kingdom |
| Product Material | Mfc Textured Matt |
| Colour/Finish | Metallic Slate |
| Mount Type | Wall Hung |
| Style | Contemporary |
| Handle Type | D Shape |
| Fixings Included | Yes |
| Construction Method | Cam & Wood Dowel |
| Construction Type | Rigid |
| Drawer Type | 80mm High Metal S/C Inc Gallery |
| Fascia Finish | Mdf Vinyl Textured Matt |
| Fsc Certified | Yes |
| Handles Included | Yes |
| Material Thickness | 18 mm |
| No. Drawers | 1 |

© ROXOR Group