Sales Code: RSE1894W

Barcode: 5056817703967

Brand: nuie Lux

Description: nuie lux Roseburn 600mm Autumn Oak 1 Drawer Wall Hung Vanity Unit With Co-ordinating Worktop



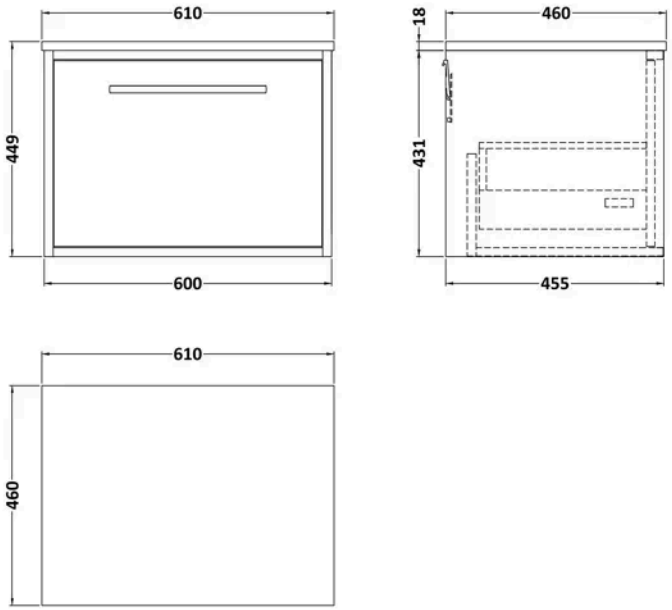

Product Dimensions

Product	449 x 610 x 460mm (H x W x D)
Packaged	470 x 620 x 475mm (H x W x D)
Nett Weight	19.2 kg
Packaged Weight	19.2 kg

Product Details

Country of Origin	United Kingdom
Product Material	Mfc Textured Woodgrain
Colour/Finish	Autumn Oak
Mount Type	Wall Hung
Style	Contemporary
Handle Type	D Shape
Fixings Included	Yes
Construction Method	Cam & Wood Dowel
Construction Type	Rigid
Drawer Type	80mm High Metal S/C Inc Gallery
Fascia Finish	Mdf Vinyl Textured Woodgrain
Fsc Certified	Yes
Handles Included	Yes
Material Thickness	18 mm
No. Drawers	1

© ROXOR Group

Sales Code: BCWT18660 **Barcode:** 5056678473122 **Brand:** BC Designs **Description:** BC Designs 605x460mm Autumn Oak MFC Worktop



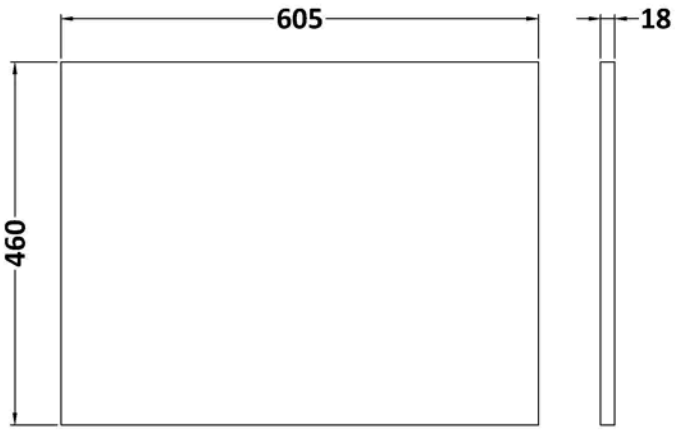

Product Dimensions

Product	18 x 460 x 605mm (H x W x D)
Packaged	20 x 610 x 465mm (H x W x D)
Nett Weight	2.2 kg
Packaged Weight	2.7 kg

Product Details

Country of Origin	United Kingdom
Product Material	Mfc
Colour/Finish	Autumn Oak
Style	Contemporary

© ROXOR Group

Sales Code: ROS1894 **Barcode:** 5056678470855 **Brand:** nuie Lux **Description:** nuie lux Roseburn 600mm Autumn Oak 1 Drawer Wall Hung Vanity Unit



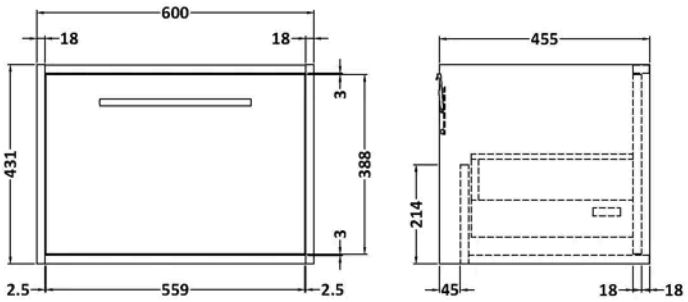

Product Dimensions

Product	359 x 455 x 600mm (H x W x D)
Packaged	470 x 620 x 475mm (H x W x D)
Nett Weight	16 kg
Packaged Weight	16.5 kg

Product Details

Country of Origin	United Kingdom
Product Material	Mfc Textured Woodgrain
Colour/Finish	Autumn Oak
Mount Type	Wall Hung
Style	Contemporary
Handle Type	D Shape
Fixings Included	Yes
Construction Method	Cam & Wood Dowel
Construction Type	Rigid
Drawer Type	80mm High Metal S/C Inc Gallery
Fascia Finish	Mdf Vinyl Textured Woodgrain
Fsc Certified	Yes
Handles Included	Yes
Material Thickness	18 mm
No. Drawers	1

© ROXOR Group