**Sales Code:** RSE1894P **Barcode:** 5056883753118 **Brand:** nuie Lux **Description:** nuie lux Roseburn Autumn Oak 600mm Wall Hung 1-Drawer Unit & Stone Basin 1TH



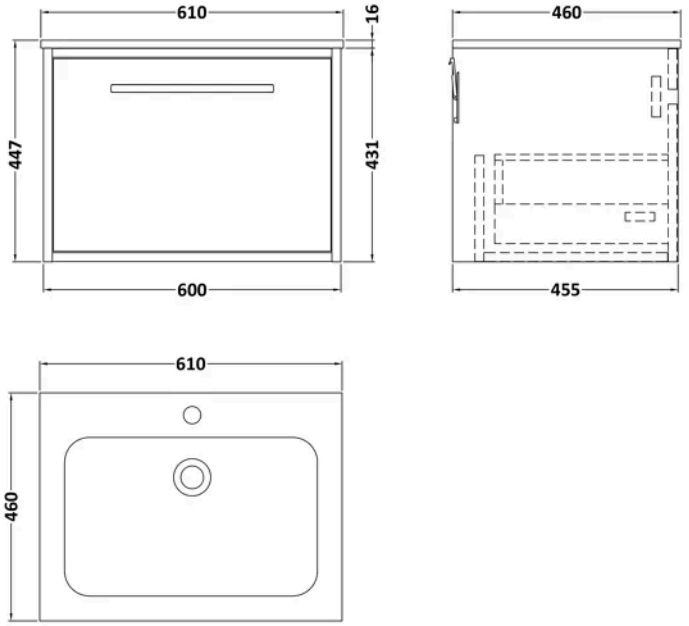


## Product Dimensions

| | |
|---|---|
| Product | 447 x 610 x 460mm (H x W x D) |
| Packaged | 470 x 620 x 475mm (H x W x D) |
| Nett Weight | 30.5 kg |
| Packaged Weight | 30.5 kg |

## Product Details

| | |
|---|---|
| Country of Origin | United Kingdom |
| Product Material | Mfc Textured Woodgrain,Stone |
| Colour/Finish | Autumn Oak |
| Mount Type | Wall Hung |
| Style | Contemporary |
| Construction Method | Cam & Wood Dowel |
| Construction Type | Rigid |
| Fascia Finish | Mdf Vinyl Textured Woodgrain |
| Handles Included | Yes |
| Inner Bowl Height | 128 mm |
| Leg Set Included | No |
| Material Thickness | 18 mm |
| No. Drawers | 1 |
| No. Of Tapholes | 1 |
| Number Of Bowls | 1 |
| Overflow Cover Included | Yes |
| Overflow Included | Yes |
| Tap Included | No |
| Waste Included | No |
| Waste Shroud | No |

© ROXOR Group

**Sales Code:** LXSB103 **Barcode:** 5056883750490 **Brand:** nuie Lux **Description:** 610 x 460mm Basin 1T/H



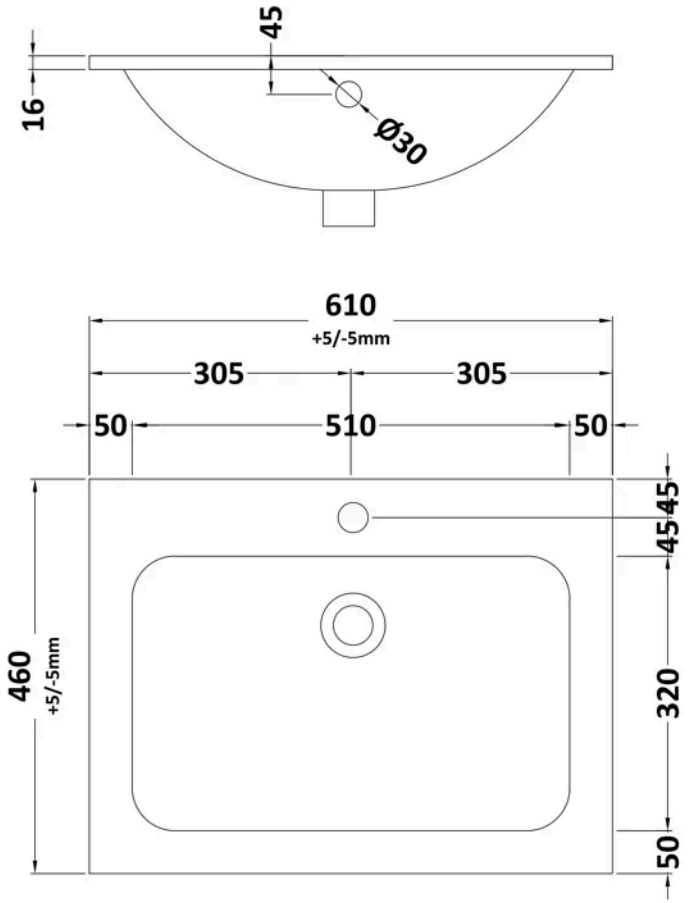


## Product Dimensions

| | |
|---|---|
| Product | 610 x 460mm (W x D) |
| Packaged | 200 x 675 x 530mm (H x W x D) |
| Nett Weight | 13.5 kg |
| Packaged Weight | 14 kg |

## Packaging Details

| | |
|---|---|
| Box Qty | 1 |

## Product Details

| | |
|---|---|
| Country of Origin | China |
| Product Material | Stone |
| Colour/Finish | Matt White |
| Style | Contemporary |
| Bottle Trap Included | No |
| Ce Certified | Yes |
| Inner Bowl Depth | 320 mm |
| Inner Bowl Height | 128 mm |
| Inner Bowl Width | 510 mm |
| No. Of Tapholes | 1 |
| Number Of Bowls | 1 |
| Overflow Cover Included | Yes |
| Overflow Included | Yes |
| Tap Included | No |
| Waste Included | No |

© ROXOR Group

**Sales Code:** ROS1894 **Barcode:** 5056678470855 **Brand:** nuie Lux **Description:** nuie lux Roseburn 600mm Autumn Oak 1 Drawer Wall Hung Vanity Unit



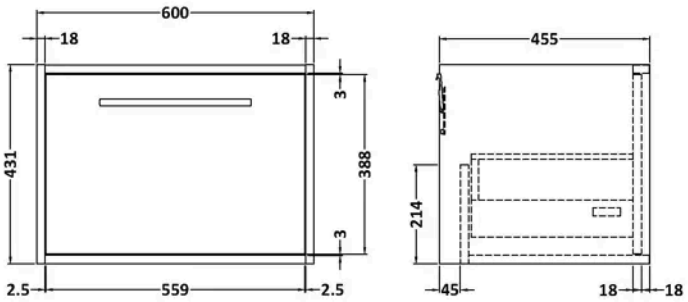


## Product Dimensions

| | |
|---|---|
| Product | 359 x 455 x 600mm (H x W x D) |
| Packaged | 470 x 620 x 475mm (H x W x D) |
| Nett Weight | 16 kg |
| Packaged Weight | 16.5 kg |

## Packaging Details

| | |
|---|---|
| Box Qty | 1 |

## Product Details

| | |
|---|---|
| Country of Origin | United Kingdom |
| Product Material | Mfc Textured Woodgrain |
| Colour/Finish | Autumn Oak |
| Mount Type | Wall Hung |
| Style | Contemporary |
| Handle Type | D Shape |
| Fixings Included | Yes |
| Construction Method | Cam & Wood Dowel |
| Construction Type | Rigid |
| Drawer Type | 80mm High Metal S/C Inc Gallery |
| Fascia Finish | Mdf Vinyl Textured Woodgrain |
| Fsc Certified | Yes |
| Handles Included | Yes |
| Material Thickness | 18 mm |
| No. Drawers | 1 |

© ROXOR Group