Sales Code: RSE1894A

Barcode: 5056817703868

Brand: nuie Lux

Description: nuie lux Roseburn 600mm Autumn Oak 1 Drawer Wall Hung Vanity Unit With 1 Tap Hole Fireclay Basin



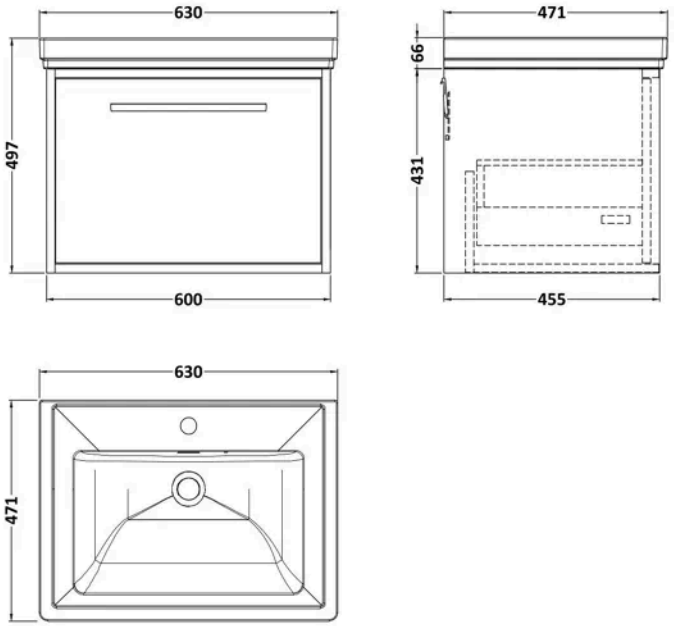

Product Dimensions

Product	497 x 630 x 471mm (H x W x D)
Packaged	470 x 620 x 475mm (H x W x D)
Nett Weight	33.8 kg
Packaged Weight	33.8 kg

Product Details

Country of Origin	United Kingdom
Product Material	Fireclay,Mfc Textured Woodgrain
Colour/Finish	Autumn Oak
Mount Type	Wall Hung
Style	Contemporary
Handle Type	D Shape
Fixings Included	Yes
Construction Method	Cam & Wood Dowel
Construction Type	Rigid
Drawer Type	80mm High Metal S/C Inc Gallery
Fascia Finish	Mdf Vinyl Textured Woodgrain
Fsc Certified	Yes
Handles Included	Yes
Inner Bowl Height	135 mm
Material Thickness	18 mm
No. Drawers	1
No. Of Tapholes	1
Number Of Bowls	1
Overflow Cover Included	Yes
Overflow Included	Yes
Tap Included	No
Waste Included	No

© ROXOR Group

Sales Code: FFB503 **Barcode:** 5056678471159 **Brand:** BC Designs **Description:** BC Designs 600mm 1 Tap Hole Traditional Fireclay Basin



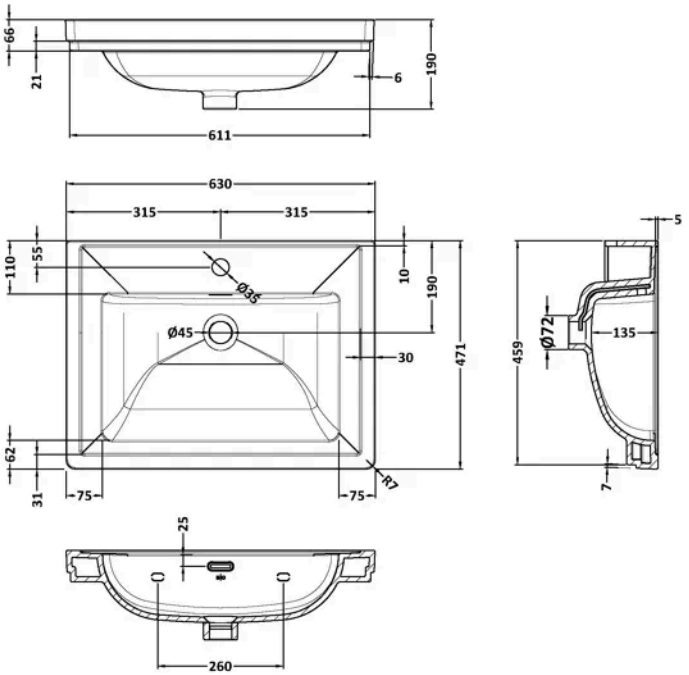

Product Dimensions

Product	190 x 630 x 471mm (H x W x D)
Packaged	490 x 650 x 220mm (H x W x D)
Nett Weight	17 kg
Packaged Weight	17.3 kg

Packaging Details

Box Qty	1

Product Details

Country of Origin	United Arab Emirates
Product Material	Fireclay
Colour/Finish	White
Style	Contemporary
Ce Certified	Yes
Inner Bowl Height	135 mm
No. Of Tapholes	1
Number Of Bowls	1
Overflow Included	Yes
Tap Included	No
Waste Included	No

© ROXOR Group

Sales Code: ROS1894 **Barcode:** 5056678470855 **Brand:** nuie Lux **Description:** nuie lux Roseburn 600mm Autumn Oak 1 Drawer Wall Hung Vanity Unit



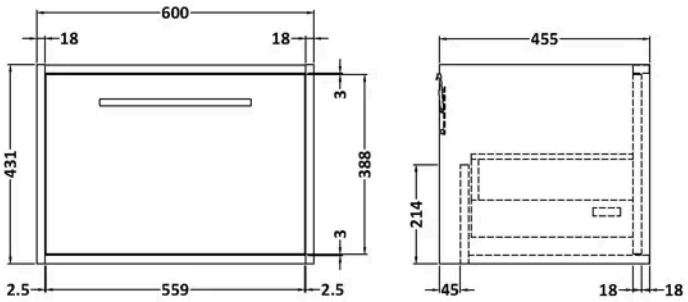

Product Dimensions

Product	359 x 455 x 600mm (H x W x D)
Packaged	470 x 620 x 475mm (H x W x D)
Nett Weight	16 kg
Packaged Weight	16.5 kg

Packaging Details

Box Qty	1

Product Details

Country of Origin	United Kingdom
Product Material	Mfc Textured Woodgrain
Colour/Finish	Autumn Oak
Mount Type	Wall Hung
Style	Contemporary
Handle Type	D Shape
Fixings Included	Yes
Construction Method	Cam & Wood Dowel
Construction Type	Rigid
Drawer Type	80mm High Metal S/C Inc Gallery
Fascia Finish	Mdf Vinyl Textured Woodgrain
Fsc Certified	Yes
Handles Included	Yes
Material Thickness	18 mm
No. Drawers	1

© ROXOR Group