Sales Code: RNDTR03 **Barcode:** 5056211855088 **Brand:** Hudson Reed **Description:** Hudson Reed Chrome Triple Shower Valve With Diverter



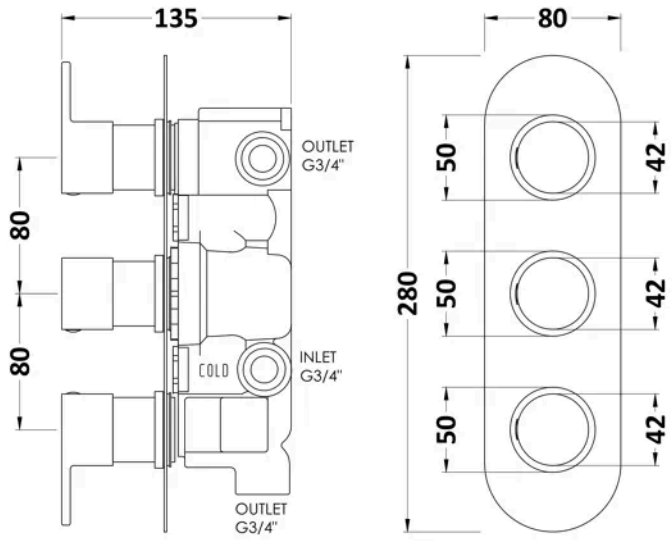

Product Dimensions

Product	280 x 95 x 136mm (H x W x D)
Packaged	130 x 240 x 250mm (H x W x D)
Outer Box	500 x 510 x 355mm (H x W x D)
Nett Weight	3.5 kg
Packaged Weight	3.5 kg

Packaging Details

Label Size (mm)	50 x 100
Label Colour	White
Label Qty	1.0000

Product Details

Country of Origin	United Kingdom
Product Material	Brass Abs
Control Type	Manual
WRAS Approved	Yes
Valve/Cartridge Type	1/4 Turn
Colour/Finish	Chrome
Mount Type	Wall Hung
Style	Contemporary
Handle Type	Round
TMV2 Approved	Yes
TMV3 Approved	No
Pipe Size	22 mm (3/4" BSP)
Pipe Centres	125
Handset Included	No
Head Included	No
Min Operating Pressure	0.5 Bar
No. Outlets	3.0000
Tmv2 Approval Number	2603035
Valve / Cartridge Type	1/4 Turn
Wras Approval No	250602040

© ROXOR Group