Sales Code: RND3210 **Barcode:** 5055369051700 **Brand:** Hudson Reed **Description:** Hudson Reed Chrome Twin Thermostatic Shower Valve



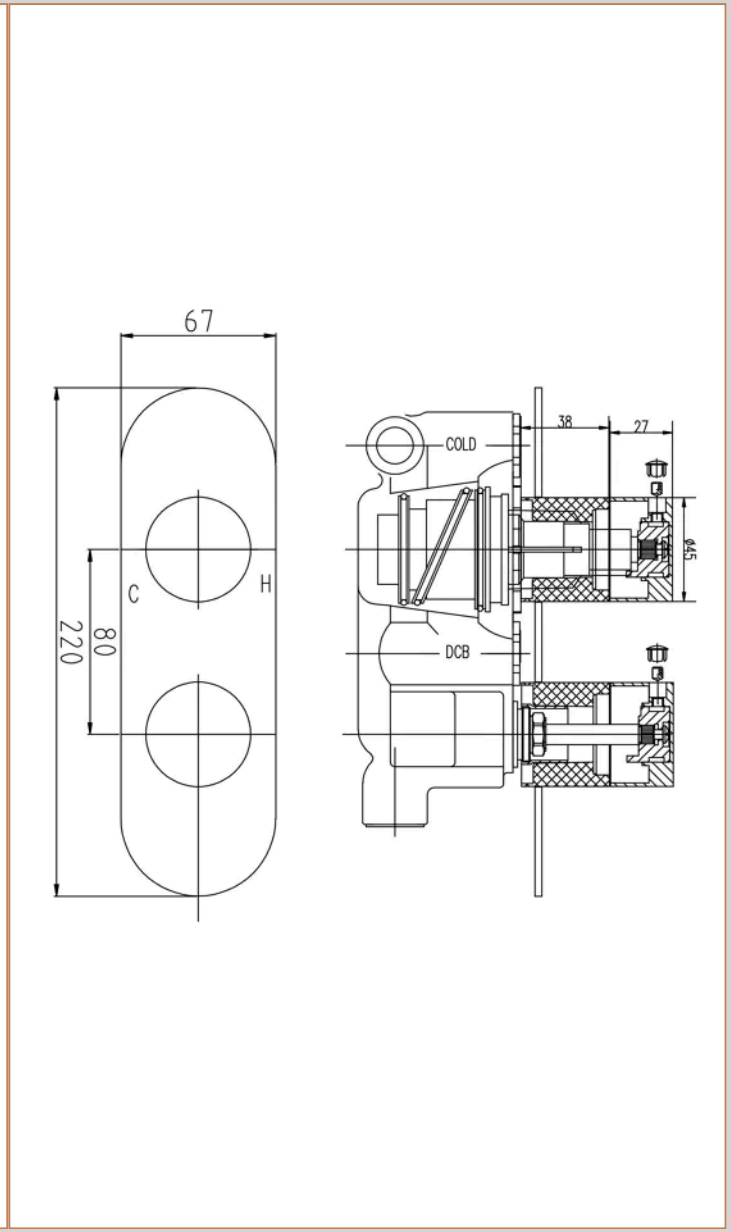

Product Dimensions

Product	215 x 120 x 135mm (H x W x D)
Packaged	110 x 240 x 250mm (H x W x D)
Nett Weight	2.64 kg
Packaged Weight	2.64 kg

Packaging Details

Label Size (mm)	50 x 100
Label Colour	White
Label Qty	2.0000

Product Details

Country of Origin	United Kingdom
Product Material	Brass Abs
Control Type	Manual
WRAS Approved	Yes
Valve/Cartridge Type	1/4 Turn
Colour/Finish	Chrome
Mount Type	Recessed/Wall
Style	Contemporary
Handle Type	Round
TMV2 Approved	Yes
TMV3 Approved	No
Handset Included	No
Head Included	No
Min Operating Pressure	0.1 Bar
Outlet Elbow Supplied	No
Tmv2 Approval Number	2603035
Valve / Cartridge Type	1/4 Turn
Wras Approval No	250602040

© ROXOR Group