Sales Code: RND3207 **Barcode:** 5055369051731 **Brand:** Hudson Reed **Description:** Hudson Reed Chrome Twin Thermostatic Shower Valve With Diverter

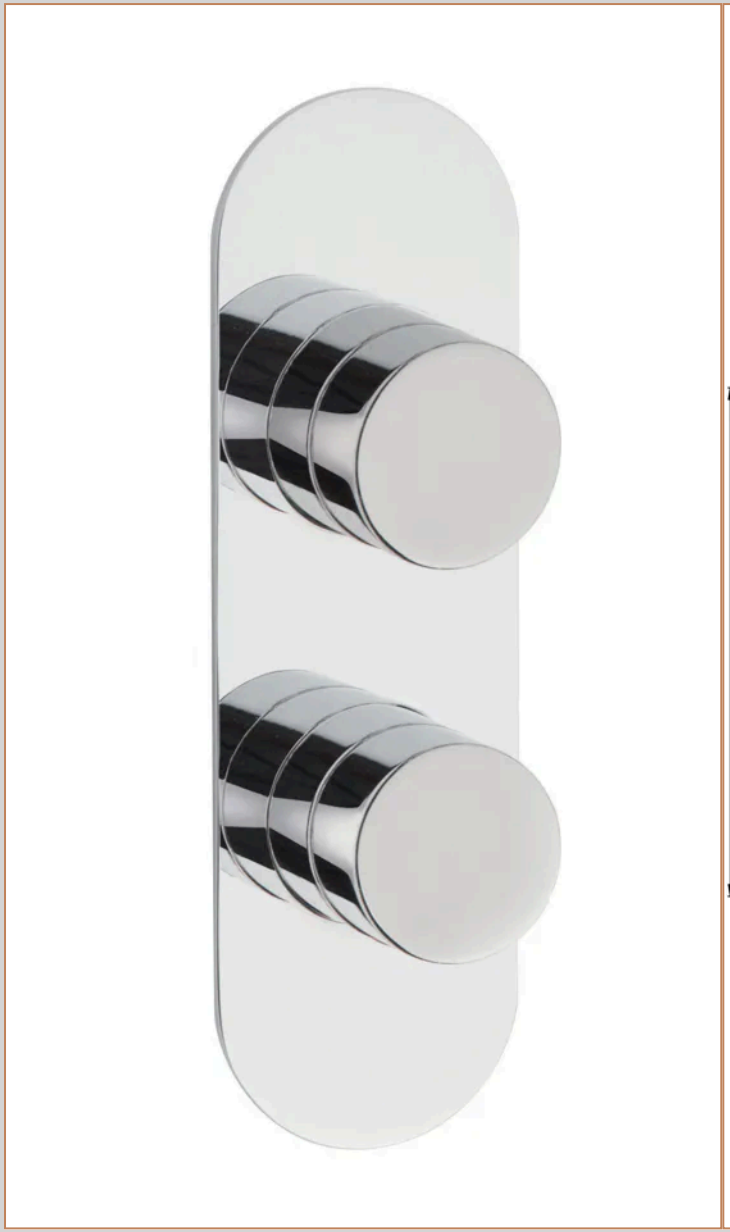

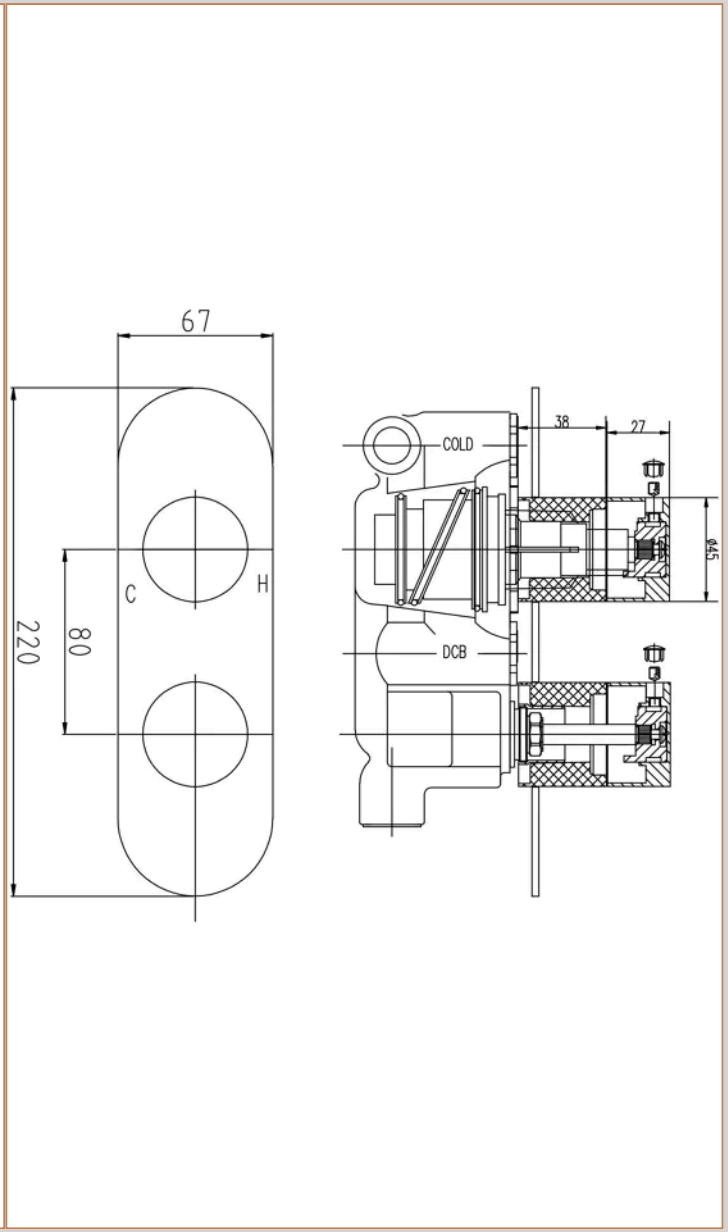

Product Dimensions

Product	220 x 67 x 135mm (H x W x D)
Packaged	130 x 240 x 250mm (H x W x D)
Nett Weight	0.2 kg
Packaged Weight	0.2 kg

Packaging Details

Label Size (mm)	50 x 100
Label Colour	White
Label Qty	2.0000

Product Details

Country of Origin	United Kingdom
Product Material	Brass Abs
Control Type	Manual
WRAS Approved	Yes
Valve/Cartridge Type	1/4 Turn
Colour/Finish	Chrome
Mount Type	Recessed/Wall
Style	Contemporary
Handle Type	Round
TMV2 Approved	Yes
TMV3 Approved	No
Pipe Size	15 mm & 22 mm
Handset Included	No
Head Included	No
Min Operating Pressure	0.5 Bar
No. Outlets	2.0000
Outlet Elbow Supplied	No
Tmv2 Approval Number	2603035
Valve / Cartridge Type	1/4 Turn
Wras Approval No	250602040

© ROXOR Group