Sales Code: RLF1700T **Barcode:** 5056211851943 **Brand:** Old London **Description:** Old London Winterburn 1700mm Single Ended Shower Bath With Corbel Legs



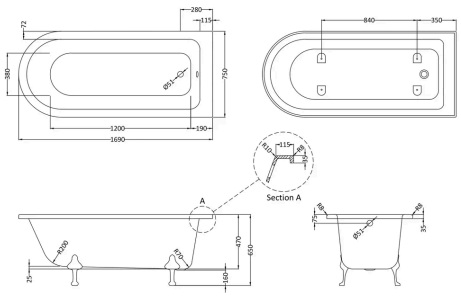

Product Dimensions

Product	650 x 750 x 1690mm (H x W x L)
Packaged	550 x 550 x 550mm (H x W x D)
Nett Weight	51.2 kg
Packaged Weight	51.7 kg

Packaging Details

Label Size (mm)	50 x 100
Label Colour	White
Label Qty	2.0000

Product Details

Volume	210 Litre
Country of Origin	China
Product Material	Acrylic
Colour/Finish	White
Style	Traditional
Fixings Included	No
Bath Panel Included	No
Ce Certified	Yes
Displaced Capacity	170 Litre
Includes Grips	No
Leg Set Included	Yes
No. Of Tapholes	No Tapholes
Overflow Included	Yes
Tap Included	No
Waste Included	No

© ROXOR Group

Sales Code: RLF1700 **Barcode:** 5056211804963 **Brand:** Old London **Description:** Old London Winterburn 1700mm Single Ended Shower Bath



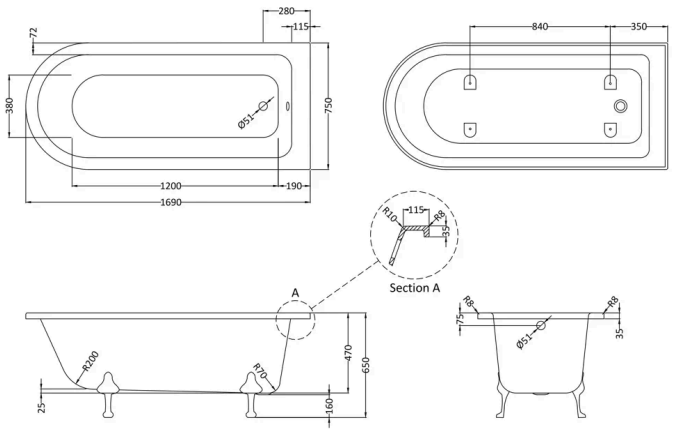

Product Dimensions

Product	650 x 750 x 1690mm (H x W x L)
Packaged	500 x 750 x 1690mm (H x W x D)
Nett Weight	47.5 kg
Packaged Weight	47.5 kg

Packaging Details

Label Size (mm)	50 x 100
Label Colour	White
Label Qty	2.0000

Product Details

Volume	210 Litre
Country of Origin	Singapore
Product Material	Acrylic
Colour/Finish	White
Style	Traditional
Fixings Included	No
Bath Panel Included	No
Ce Certified	Yes
Displaced Capacity	170 Litre
Includes Grips	No
Leg Set Included	No
No. Of Tapholes	No Tapholes
Overflow Included	Yes
Tap Included	No
Waste Included	No

© ROXOR Group

Sales Code: T1C **Barcode:** 5055369029136 **Brand:** Old London **Description:** Old London Traditional Corbel Bath Leg Set



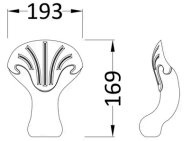

Product Dimensions

Product	169 x 193 x 85mm (H x W x D)
Packaged	250 x 500 x 500mm (H x W x D)
Nett Weight	4.2 kg
Packaged Weight	4.5 kg

Packaging Details

Box Qty	1

Product Details

Country of Origin	China
Product Material	Aluminium
Colour/Finish	Chrome
Style	Traditional

© ROXOR Group