Sales Code: RL1707M1 **Barcode:** 5055275832547 **Brand:** Old London **Description:** Hudson Reed 1690mm Freestanding Bath With Deacon Legs



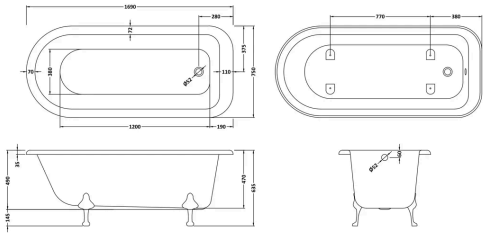

Product Dimensions

Product	635 x 750 x 1690mm (H x W x L)
Packaged	500 x 700 x 1700mm (H x W x D)
Nett Weight	48.27 kg
Packaged Weight	48.27 kg

Product Details

Volume	200 Litre
Country of Origin	China
Product Material	Acrylic
Colour/Finish	White
Style	Traditional
Fixings Included	No
Bath Panel Included	No
Displaced Capacity	130 Litre
Includes Grips	No
No. Of Tapholes	No Tapholes
Overflow Included	Yes
Tap Included	No
Waste Included	No

© ROXOR Group

Sales Code: M1C **Barcode:** 5055369044818 **Brand:** Old London **Description:** Leg Set M1 For Traditional Freestanding Baths Deacon



Technical Drawing Not Available

Product Dimensions

Packaged	230 x 455 x 470mm (H x W x D)
Nett Weight	5.4 kg
Packaged Weight	5.77 kg

Product Details

Country of Origin	China

© ROXOR Group

Sales Code: RL1707 **Barcode:** 5055369006533 **Brand:** Old London **Description:** Old London Barnsbury 1700mm Single Ended Freestanding Bath



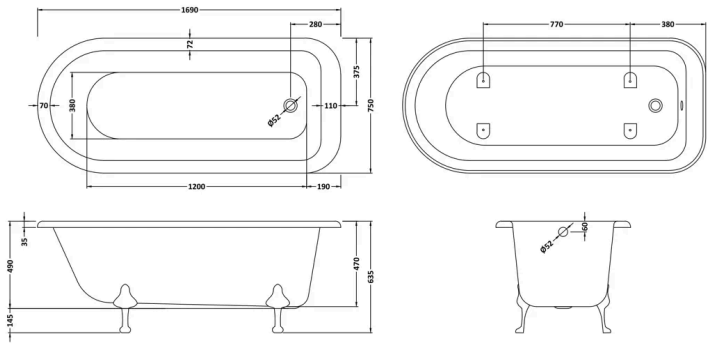

Product Dimensions

Product	635 x 750 x 1690mm (H x W x L)
Packaged	500 x 700 x 1700mm (H x W x D)
Nett Weight	40 kg
Packaged Weight	42.5 kg

Packaging Details

Label Size (mm)	50 x 100
Label Colour	White
Label Qty	2.0000

Product Details

Volume	200 Litre
Country of Origin	China
Product Material	Acrylic
Colour/Finish	White
Style	Traditional
Fixings Included	No
Bath Panel Included	No
Ce Certified	Yes
Displaced Capacity	130 Litre
Includes Grips	No
Leg Set Included	No
No. Of Tapholes	No Tapholes
Overflow Included	Yes
Tap Included	No
Waste Included	No

© ROXOR Group