Sales Code: RL1690T

Barcode: 5055369032303

Brand: Old London

Description: Old London Brockley 1700mm Freestanding Single Ended Slipper Bath With Corbel Legs



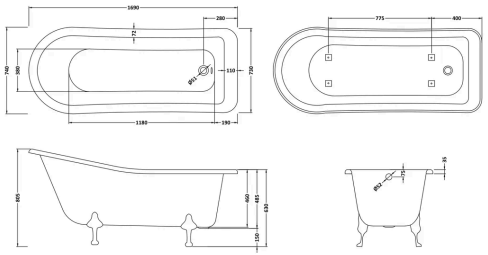

Product Dimensions

Product	625 x 730 x 1690mm (H x W x L)
Packaged	470 x 720 x 1700mm (H x W x D)
Nett Weight	49.7 kg
Packaged Weight	50.2 kg

Product Details

Volume	197 Litre
Country of Origin	United Kingdom
Product Material	Acrylic
Colour/Finish	White
Style	Traditional
Fixings Included	No
Bath Panel Included	No
Ce Certified	Yes
Displaced Capacity	125 Litre
Includes Grips	No
No. Of Tapholes	No Tapholes
Overflow Included	Yes
Tap Included	No
Waste Included	No

© ROXOR Group

Sales Code: RL1690 **Barcode:** 5055369006557 **Brand:** Old London **Description:** Old London Brockley 1700mm Slipper Freestanding Bath



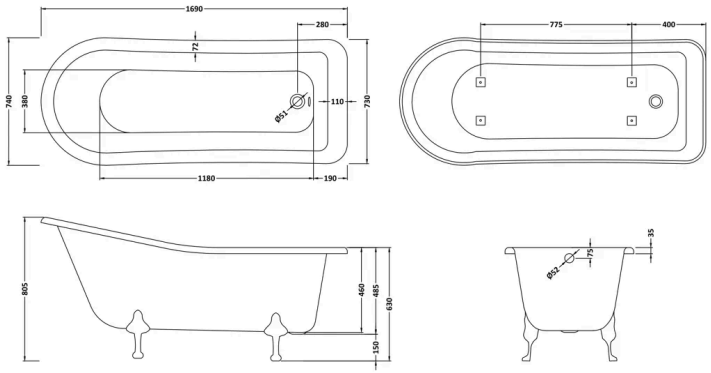

Product Dimensions

Product	625 x 730 x 1690mm (H x W x L)
Packaged	470 x 720 x 1700mm (H x W x D)
Nett Weight	46 kg
Packaged Weight	46 kg

Packaging Details

Label Size (mm)	50 x 100
Label Colour	White
Label Qty	2.0000

Product Details

Volume	197 Litre
Country of Origin	China
Product Material	Acrylic
Colour/Finish	White
Style	Traditional
Fixings Included	No
Bath Panel Included	No
Ce Certified	Yes
Displaced Capacity	125 Litre
Includes Grips	No
Leg Set Included	No
No. Of Tapholes	No Tapholes
Overflow Included	Yes
Tap Included	No
Waste Included	No

© ROXOR Group

Sales Code: T1C **Barcode:** 5055369029136 **Brand:** Old London **Description:** Old London Traditional Corbel Bath Leg Set



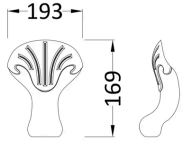

Product Dimensions

Product	169 x 193 x 85mm (H x W x D)
Packaged	250 x 500 x 500mm (H x W x D)
Nett Weight	4.2 kg
Packaged Weight	4.5 kg

Product Details

Country of Origin	China
Product Material	Aluminium
Colour/Finish	Chrome
Style	Traditional

© ROXOR Group