Sales Code: RL1501C2 **Barcode:** 5055275832554 **Brand:** Old London **Description:** Old London Kingsbury 1500mm Double Ended Freestanding Bath with Pride Legs



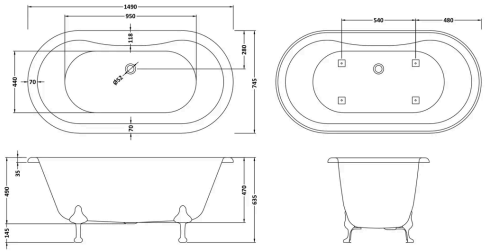

Product Dimensions

Product	635 x 745 x 1490mm (H x W x L)
Packaged	500 x 790 x 1580mm (H x W x D)
Nett Weight	49.2 kg
Packaged Weight	49.7 kg

Product Details

Volume	185 Litre
Country of Origin	China
Product Material	Acrylic
Colour/Finish	White
Style	Traditional
Fixings Included	No
Bath Panel Included	No
Ce Certified	Yes
Displaced Capacity	115 Litre
Includes Grips	No
No. Of Tapholes	No Tapholes
Overflow Included	Yes
Tap Included	No
Waste Included	No

© ROXOR Group

Sales Code: RL1501 **Barcode:** 5055369006519 **Brand:** Old London **Description:** Old London Kingsbury 1500mm Double Ended Freestanding Bath



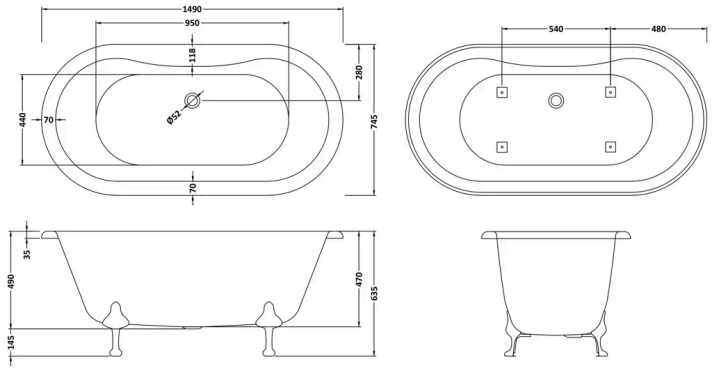

Product Dimensions

Product	635 x 745 x 1490mm (H x W x L)
Packaged	500 x 790 x 1580mm (H x W x D)
Nett Weight	45.8 kg
Packaged Weight	45.8 kg

Packaging Details

Label Size (mm)	50 x 100
Label Colour	White
Label Qty	2.0000

Product Details

Volume	185 Litre
Country of Origin	China
Product Material	Acrylic
Colour/Finish	White
Style	Traditional
Fixings Included	No
Bath Panel Included	No
Ce Certified	Yes
Displaced Capacity	115 Litre
Includes Grips	No
Leg Set Included	No
No. Of Tapholes	No Tapholes
Overflow Included	Yes
Tap Included	No
Waste Included	No

© ROXOR Group

Sales Code: T2C **Barcode:** 5055369044801 **Brand:** Old London **Description:** Old London Traditional Pride Bath Leg Set



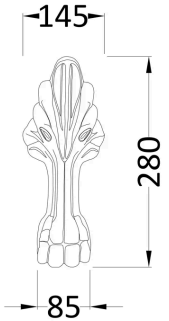

Product Dimensions

Product	280 x 145 x 85mm (H x W x D)
Packaged	225 x 460 x 465mm (H x W x D)
Nett Weight	3.9 kg
Packaged Weight	4.23 kg

Product Details

Country of Origin	China
Product Material	Aluminium
Colour/Finish	Chrome
Style	Traditional

© ROXOR Group