**Sales Code:** RL1490T

**Barcode:** 5055369032280

**Brand:** Old London

**Description:** Old London Brockley 1500mm Freestanding Single Ended Slipper Bath With Corbel Legs



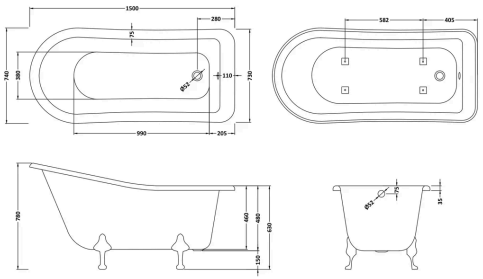

## Product Dimensions

| | |
|---|---|
| Product | 620 x 750 x 1500mm (H x W x L) |
| Packaged | 635 x 780 x 1580mm (H x W x D) |
| Nett Weight | 26.7 kg |
| Packaged Weight | 27.2 kg |

## Product Details

| | |
|---|---|
| Volume | 155 Litre |
| Country of Origin | United Kingdom |
| Product Material | Acrylic |
| Colour/Finish | White |
| Style | Traditional |
| Fixings Included | No |
| Bath Panel Included | No |
| Ce Certified | Yes |
| Displaced Capacity | 85 Litre |
| Includes Grips | No |
| No. Of Tapholes | No Tapholes |
| Overflow Included | Yes |
| Tap Included | No |
| Waste Included | No |

© ROXOR Group

**Sales Code:** RL1490 **Barcode:** 5055369006540 **Brand:** Old London **Description:** Old London Brockley 1500mm Slipper Freestanding Bath



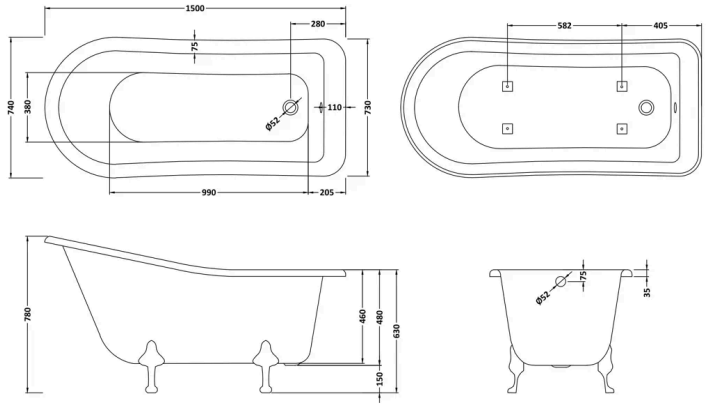


## Product Dimensions

| | |
|---|---|
| Product | 620 x 750 x 1500mm (H x W x L) |
| Packaged | 635 x 780 x 1580mm (H x W x D) |
| Nett Weight | 23 kg |
| Packaged Weight | 24 kg |

## Packaging Details

| | |
|---|---|
| Label Size (mm) | 50 x 100 |
| Label Colour | White |
| Label Qty | 2.0000 |

## Product Details

| | |
|---|---|
| Volume | 155 Litre |
| Country of Origin | China |
| Product Material | Acrylic |
| Colour/Finish | White |
| Style | Traditional |
| Fixings Included | No |
| Bath Panel Included | No |
| Ce Certified | Yes |
| Displaced Capacity | 85 Litre |
| Includes Grips | No |
| Leg Set Included | No |
| No. Of Tapholes | No Tapholes |
| Overflow Included | Yes |
| Tap Included | No |
| Waste Included | No |

© ROXOR Group

**Sales Code:** T1C **Barcode:** 5055369029136 **Brand:** Old London **Description:** Old London Traditional Corbel Bath Leg Set



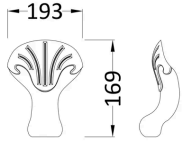


## Product Dimensions

| | |
|---|---|
| Product | 169 x 193 x 85mm (H x W x D) |
| Packaged | 250 x 500 x 500mm (H x W x D) |
| Nett Weight | 4.2 kg |
| Packaged Weight | 4.5 kg |

## Product Details

| | |
|---|---|
| Country of Origin | China |
| Product Material | Aluminium |
| Colour/Finish | Chrome |
| Style | Traditional |

© ROXOR Group