Sales Code: RE1701M1 **Barcode:** 5055275834909 **Brand:** Old London **Description:** Hudson Reed Leg 1700mm Freestanding Bath With Waste And Legs



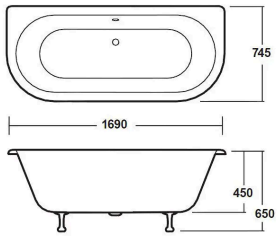

Product Dimensions

Product	485 x 750 x 1700mm (H x W x L)
Packaged	555 x 825 x 1835mm (H x W x D)
Nett Weight	45.77 kg
Packaged Weight	45.77 kg

Product Details

Volume	228 Litre
Country of Origin	China
Product Material	Acrylic
Colour/Finish	White
Style	Traditional
Fixings Included	No
Bath Panel Included	No
Displaced Capacity	158 Litre
Includes Grips	No
No. Of Tapholes	No Tapholes
Overflow Included	Yes
Tap Included	No
Waste Included	Yes

© ROXOR Group

Sales Code: M1C **Barcode:** 5055369044818 **Brand:** Old London **Description:** Leg Set M1 For Traditional Freestanding Baths Deacon



Technical Drawing Not Available

Product Dimensions

Packaged	230 x 455 x 470mm (H x W x D)
Nett Weight	5.4 kg
Packaged Weight	5.77 kg

Product Details

Country of Origin	China

© ROXOR Group

Sales Code: RE1701 **Barcode:** 5055369028955 **Brand:** Old London **Description:** Old London Kenton 1700mm Back to Wall Double Ended Freestanding Bath



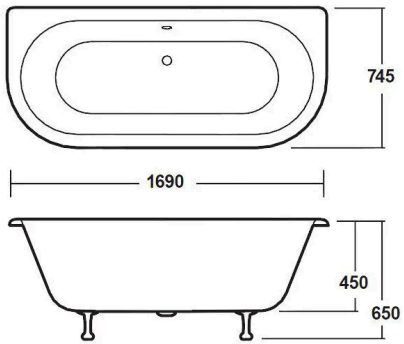

Product Dimensions

Product	485 x 750 x 1700mm (H x W x L)
Packaged	505 x 505 x 1720mm (H x W x D)
Nett Weight	39.5 kg
Packaged Weight	40 kg

Packaging Details

Label Size (mm)	50 x 100
Label Colour	White
Label Qty	2.0000

Product Details

Volume	228 Litre
Country of Origin	China
Product Material	Acrylic
Colour/Finish	White
Style	Traditional
Fixings Included	No
Bath Panel Included	No
Ce Certified	Yes
Displaced Capacity	158 Litre
Includes Grips	No
Leg Set Included	No
No. Of Tapholes	No Tapholes
Overflow Included	Yes
Tap Included	No
Waste Included	No

© ROXOR Group