Sales Code: RC0153 **Barcode:** 5056211853350 **Brand:** nuie **Description:** nuie core 500mm Gloss White 2 Door Wall Hung Vanity Unit



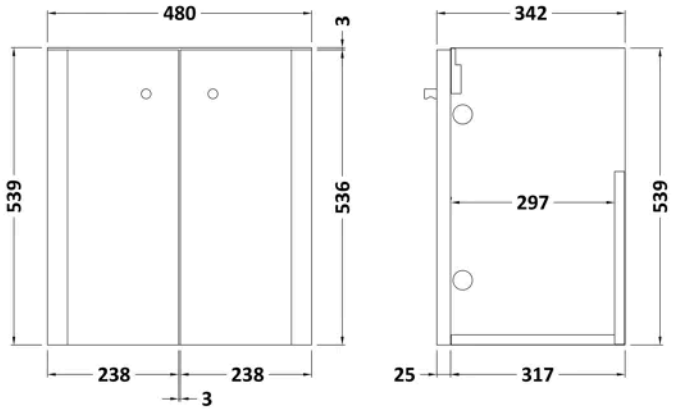

Product Dimensions

Product	539 x 479 x 342mm (H x W x D)
Packaged	560 x 500 x 340mm (H x W x D)
Nett Weight	15.5 kg
Packaged Weight	16 kg

Packaging Details

Box Qty	1

Product Details

Country of Origin	China
Product Material	Mdf Painted Gloss
Colour/Finish	Gloss White
Mount Type	Wall Hung
Style	Contemporary
Construction Method	Cam & Wood Dowel
Construction Type	Rigid
Fascia Finish	Mdf Painted Gloss
Handles Included	Yes
Material Thickness	18 mm
No. Doors	2
No. Shelves	1
Number Of Shelves	1

© ROXOR Group