Sales Code: RC01453 **Barcode:** 5056462618494 **Brand:** nuie **Description:** nuie core 500mm Soft Black 2 Door Wall Hung Vanity Unit



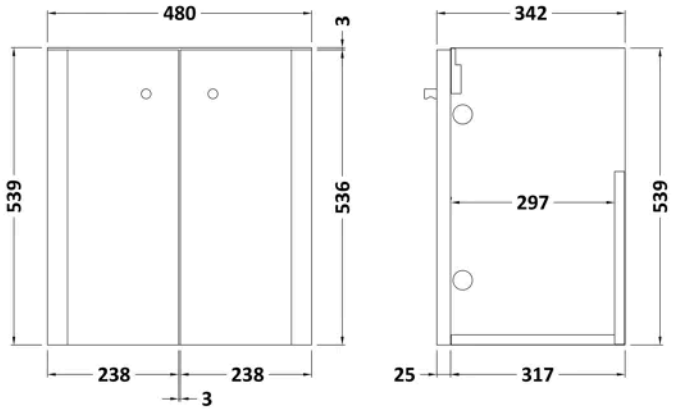

Product Dimensions

Product	539 x 479 x 342mm (H x W x D)
Packaged	560 x 500 x 340mm (H x W x D)
Nett Weight	15.5 kg
Packaged Weight	16 kg

Packaging Details

Box Qty	1

Product Details

Country of Origin	China
Product Material	Mdf Painted Matt
Colour/Finish	Soft Black
Mount Type	Wall Hung
Style	Contemporary
Construction Method	Cam & Wood Dowel
Construction Type	Rigid
Fascia Finish	Mdf Painted Matt
Handles Included	Yes
Material Thickness	18 mm
No. Doors	2
No. Shelves	1
Number Of Shelves	1

© ROXOR Group