Sales Code: RAMW002 **Barcode:** 5056817746155 **Brand:** nuie Choice **Description:** nuie choice Ramsay Round Back to Wall Toilet Pan



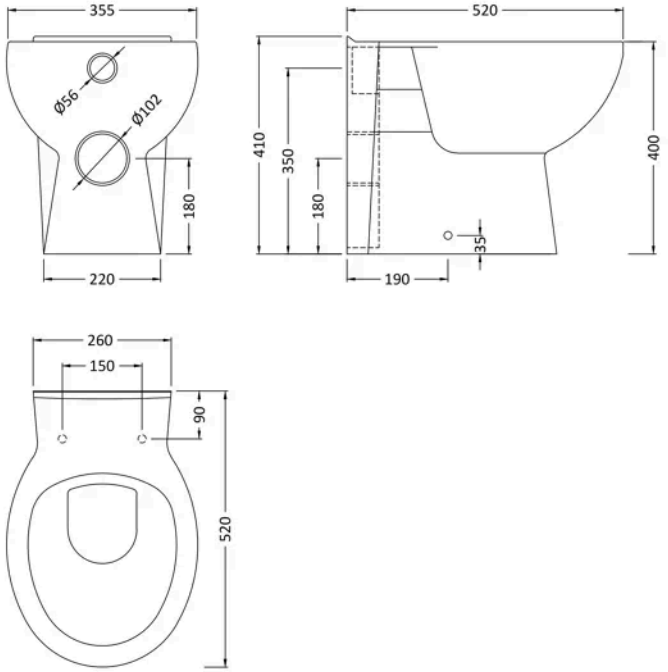

Product Dimensions

Product	410 x 355 x 520mm (H x W x D)
Packaged	420 x 395 x 555mm (H x W x D)
Nett Weight	18.5 kg
Packaged Weight	19 kg

Packaging Details

Box Qty	1

Product Details

Country of Origin	China
Product Material	Vitreous China
Colour/Finish	White
Style	Contemporary
Ce Certified	Yes
Includes Seat	No
Pan Type	Back To Wall

© ROXOR Group