Sales Code: RAM932 **Barcode:** 5056817746186 **Brand:** nuie Choice **Description:** nuie choice Ramsay 1 Tap Hole 350mm Wall Hung Ceramic Basin



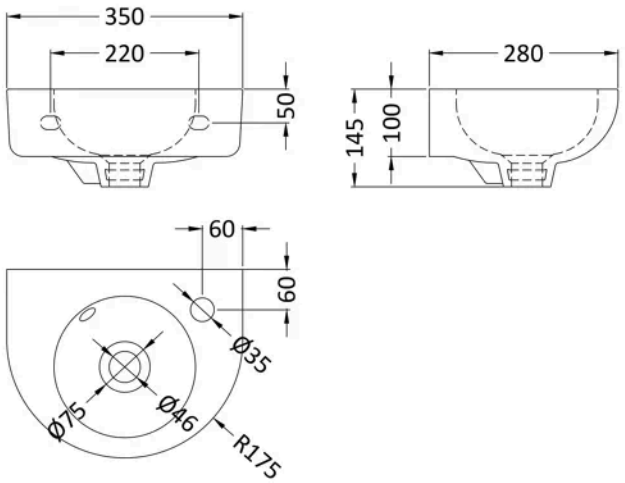

Product Dimensions

Product	145 x 350 x 280mm (H x W x D)
Packaged	305 x 160 x 365mm (H x W x D)
Nett Weight	7 kg
Packaged Weight	7 kg

Packaging Details

Box Qty	1

Product Details

Country of Origin	Turkey
Product Material	Vitreous China
Colour/Finish	White
Style	Contemporary
Fixings Included	Yes
Ce Certified	Yes
Inner Bowl Depth	215 mm
Inner Bowl Height	95 mm
Inner Bowl Width	215 mm
No. Of Tapholes	1
Number Of Bowls	1
Overflow Cover Included	Yes
Overflow Included	Yes
Tap Included	No
Waste Included	No

© ROXOR Group