Sales Code: RAM832 **Barcode:** 5056817746209 **Brand:** nuie Choice **Description:** nuie choice Ramsay 1 Tap Hole 350mm Wall Hung Ceramic Basin



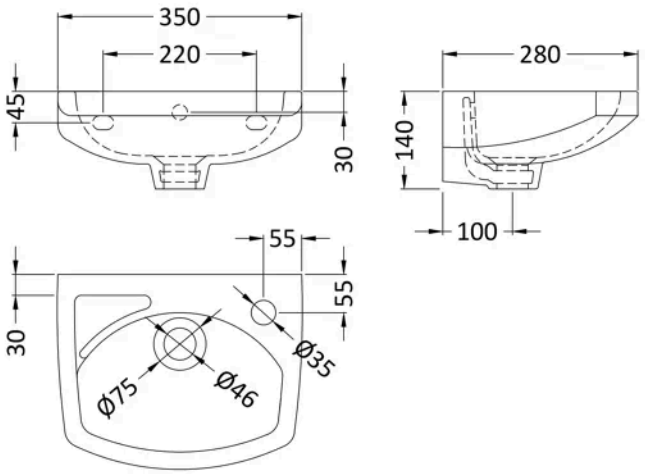

Product Dimensions

Product	140 x 350 x 280mm (H x W x D)
Packaged	305 x 160 x 365mm (H x W x D)
Nett Weight	6.8 kg
Packaged Weight	7 kg

Packaging Details

Box Qty	1

Product Details

Country of Origin	Turkey
Product Material	Vitreous China
Colour/Finish	White
Mount Type	Wall Hung
Style	Contemporary
Fixings Included	No
Ce Certified	Yes
Inner Bowl Depth	190 mm
Inner Bowl Height	95 mm
Inner Bowl Width	280 mm
No. Of Tapholes	1
Number Of Bowls	1
Overflow Cover Included	Yes
Overflow Included	Yes
Tap Included	No
Waste Included	No

© ROXOR Group