Sales Code: QUA007LBG

Barcode: 5056462613819

Brand: Hudson Reed

Description: Hudson Reed Quartet 720mm Charcoal Black Wall Hung 2 Drawer Cabinet With Worktop With Handles



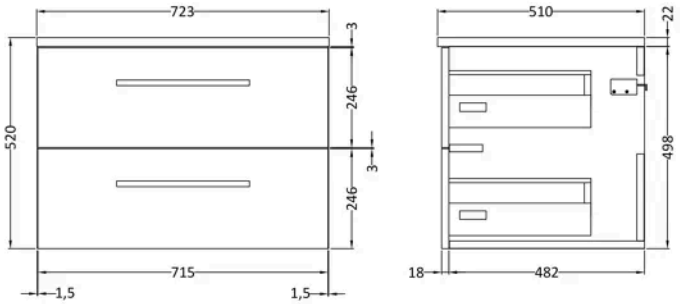

Product Dimensions

Product	520 x 723 x 510mm (H x W x D)
Packaged	550 x 550 x 550mm (H x W x D)
Nett Weight	0.01 kg
Packaged Weight	0.01 kg

Product Details

Country of Origin	United Kingdom
Product Material	Mfc Textured Matt
Colour/Finish	Charcoal Black
Mount Type	Wall Hung
Style	Contemporary
Handle Type	Profile
Construction Method	Cam & Wood Dowel
Construction Type	Rigid
Drawer Type	80mm High Metal S/C Inc Gallery
Fascia Finish	Mfc Textured Matt
Fsc Certified	Yes
Handles Included	Yes
Material Thickness	18 mm
No. Drawers	2
Waste Shroud	Yes

© ROXOR Group

Sales Code: LBG723 **Barcode:** 5056211874102 **Brand:** Hudson Reed **Description:** nuie 720mm Bellato Grey Laminate Cabinet Worktop

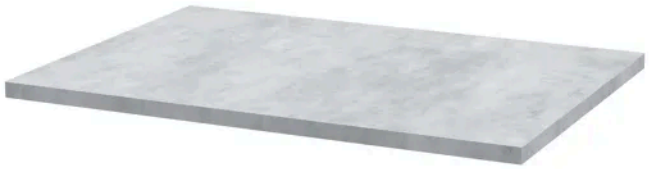

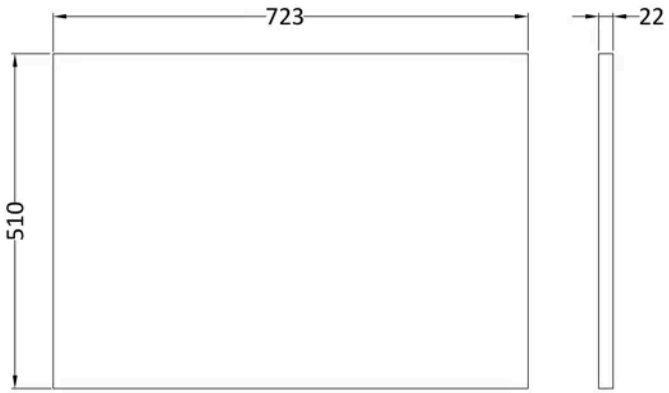

Product Dimensions

Product	22 x 723 x 510mm (H x W x D)
Packaged	25 x 725 x 575mm (H x W x D)
Nett Weight	3.08 kg
Packaged Weight	3.08 kg

Product Details

Country of Origin	United Kingdom

© ROXOR Group

Sales Code: NVQ634 **Barcode:** 5055275883365 **Brand:** Hudson Reed **Description:** Quartet Wall Hung 2 Drawer Vanity Unit 718mm



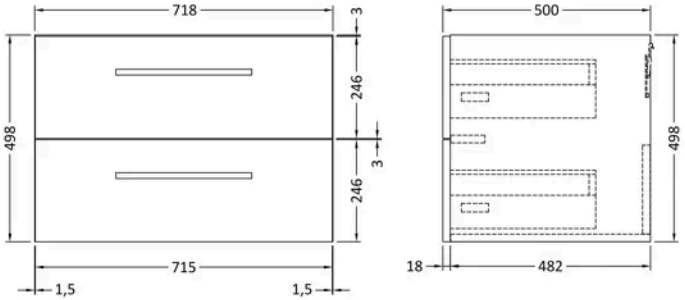

Product Dimensions

Packaged	520 x 740 x 520mm (H x W x D)
Nett Weight	35 kg
Packaged Weight	35 kg

Product Details

Country of Origin	United Kingdom

© ROXOR Group